UNITED

CATALOG | 2022

UNITED MOTOR WORKS (SIAM) PUBLIC COMPANY LIMITED

www.umwsiam.com

We are UNITED
We are Solution Provider

From a relatively humble beginning in 1947, United Motor Works (Siam) Public Company Limited (UMWS) has achieved its business presence today through sustained business growth and continuous expansion. In 2006, "UMWS" became a member of the HUP SOON GLOBAL GROUP to further strengthening its position in the market and guaranteeing not only its success but also its financial security. We are determined to be a leading marketer and industrial equipment solution provider focused on "Safety and Solution". We serve customers with quality and speedy response in the 3 service centres, North Centre, East Centre and West Centre. With our long experience, you are assured to get utmost satisfaction from our professional consultants and team, as well as world class quality products. We provide customers the quality solution to create greater customer experience.

MILESTONES

"A Good business reputation does not spring up overnight but grows slowly and soundly because it is rooted in the solid groundof customer satisfaction."

Chia Cheng Guan | Founder of Hup Soon Global

1947

Founded by Chia family as a distributor of automotive parts

1968

Official grand opening of a 9 storey building at Surawongse Road

1983

Appointed as the distributor for Mitsubishi Material Handling Equipment

1984

Appointed as the distributor for Ammco brake service tools and Equipment, Coats Wheel Balancers and Tyre Changers

1994

Grand opening of new Corporate Headquarters at Rangsit (North Centre)

Appointed as the dealer license from Mondolfo to supply tyre-service equipment to garages

1996

Became part of the Hup Soon Global Group

2006

Appointed as the distributor for Rocket Brand of Traction Batteries

2011

Eastern Branch set up (East Centre)

2012

UMWS 70th Anniversary

2015

Appointed as the distributor for Elgi and JLG

2016

Launched UNITED CAPITAL EQUIPMENT CO., LTD.

Open Mahachai Branch (West Centre)

2017

Certified by ISO 9001: 2015

2019

Distributor for tSm Technology

2020

Appointed as the distributor for Hydrolution

2021

CONTENTS

Material Handling
- Mitsubishi Forklift Trucks 4
  - IC Trucks
    - Mitsubishi Grendia 6
    - Mitsubishi Clasidia 12
  - Electric Forklifts
    - Counterbalance Trucks 13
    - Warehouse Trucks 17
- MLift Trucks 27
- Lithium-Ion Battery 34
- Forklift Attachment 36

Mobile Elevating Work Platform 38
- Electric & Hybrid Boom Lift 40
- Telescopic Boom Lift 42
- Toucan 46
- Compact Crawler 48
- Scissor Lift 50
- Vertical 52
- Telehandlers 54
- Telehandlers Attachment 56

Automotive Garage Equipment 58
- Combination Brake Lathe 62
- Tyre Changer 63
- Wheel Balancer 66
- Computerized Wheel Aligners 67
- Lifting Equipment 68
- Air Compressor 72
- Air Dryer 74
- Wheel Chargers 76
- Battery Electrical System Testers 77
- Four Post Runway Forklift Service lift 78
- Tyre Sensor 79
- Portable Inflator 80

Hydraulic Tools & Machines 81
- Hydraulic Cylinders 82
- Hydraulic Pumps 87
- Hydraulic Pullers 96
- Hydraulic Spreaders 102
- Nut Splitters 103
- Portable Power Kits 104
- Shop Presses 105
- Manufacturing Beveling Machine 106
- Portable Multi-Function Line Boring Machine 109
- Heavy Duty Hydraulic Cylinder 110
- Strand Jacking 112

After Market 113
- Battery Solution 114
- Parts / Components 125
- Fleet management 131
- Rental 132
- Used 133

Royal Lift Truck 137
- Royal Lift Truck LI-ION Battery 139
- Royal Lift Truck Terrain 141

FORKLIFT TRUCK

ALL THE PERFORMANCE YOU NEED

More quality... More performance... More reliability and more value for money... It's no wonder that businesses which rely on their trucks, rely on Mitsubishi. We deploy a diverse lineup of products to meet a variety of needs in environments ranging from ports and distribution centers, to factories and warehouses. Our forklift trucks make your business more productive and profitable. Trucks that are more economical for you to run and maintain, more environmentally friendly.

MITSUBISHI FORKLIFT TRUCKS

GASOLINE/LPG FORKLIFT

The sophisticated engine technology of our LPG counterbalance trucks, together with advanced design in every other component and system, delivers high efficiency and low emissions.

DIESEL FORKLIFT

Our diesel counterbalance engineering blends power and durability with operating economy, ergonomics and environmental friendliness.

ELECTRIC FORKLIFT

Innovative design and advanced electronic technology make our electric counterbalance trucks unbeatable for performance, user-friendliness and sheer flexibility. 3 and 4 Wheel Counterbalance Trucks are available.

WAREHOUSE EQUIPMENT

Our exceptional standards of quality, reliability and value are applied equally to a range of warehouse equipment that covers every handling and storage situation. We have planned maintenance, unmatched industry parts availability, training, manufacturer-supported programs and a complete selection of warehouse products, all backed by full market coverage.

GRENDIA DIESEL

Developed to help your operator achieve maximum productivity, while minimising running costs, GRENDiA sets the highest standards for IC engine counterbalance forklift trucks.

With its exceptional fuel economy, durable components and low-maintenance design, GRENDiA makes perfect business sense. What's more, it comes with a package of advanced features, fitted as standard, that offers true value for money.

Fast, stable and exceptionally powerful, GRENDiA forklift trucks offer a potent combination of high efficiency and low emissions in line with Euro Stage V regulations.

To that, Mitsubishi Forklift Trucks has added a host of ergonomic features to maximise comfort, control and precision. The result is a forklift that can be relied upon to deliver top performance, whatever the application, whatever the conditions.

- Travel hydraulic interlock improve vehicle safety
- Large capacity engine
- Memory type fuel gauge enable hassel free fuel level checking
- Double action parking brake prevent release of parking brake, enable safety
- Minimized operator's fatigue with suspension seat
- Standard LED lights
- Integrated Presence System (IPS) prevents accidents caused by unexpected movement of unmanned forklift trucks
- Easy operation
- Operator comfort
- Excellent visibility
- Centralized maintenance area

FD15-35N

TYPE	MODEL	CAPACITY	LOAD CENTER	MAXIMUM MAST HEIGHT
Diesel	FD15N	1500kg	500mm	7000mm
	FD18N	1750kg	500mm	7000mm
	FD20CN	2000kg	500mm	5500mm
	FD20N	2000kg	500mm	7000mm
	FD25N	2500kg	500mm	7000mm
	FD30N	3000kg	500mm	7000mm
	FD35N	3500kg	500mm	6000mm

FD40-55N

TYPE	MODEL	CAPACITY	LOAD CENTER	MAXIMUM MAST HEIGHT
Diesel	FD40N	4000kg	500mm	7000mm
	FD45N	4500kg	500mm	7000mm
	FD50CN	5000kg	500mm	7000mm
	FD50N	5000kg	600mm	7000mm
	FD55N	5500kg	600mm	6000mm

FD70-100NH

TYPE	MODEL	CAPACITY	LOAD CENTER	MAXIMUM MAST HEIGHT
Diesel	FD70NH	7000kg	600mm	8000mm
	FD80NH	8000kg	600mm	8000mm
	FD100NH	10000kg	600mm	6000mm

FD100-160(S)NL

TYPE	MODEL	CAPACITY	LOAD CENTER	MAXIMUM MAST HEIGHT
Diesel	FD100NL	10000kg	600mm	6000mm
	FD115NL	11500kg	600mm	6000mm
	FD120NL	12000kg	600mm	6000mm
	FD135NL	13500kg	600mm	6000mm
	FD150SNL	15000kg	600mm	6000mm
	FD160SNL	16000kg	600mm	6000mm

- Capacity rate is calculated at Mitsubishi manufacture standard mast height., without attachment
- The capacity might be varied due to the mast height or with attachment.

Please contact our sales consultant for more details.

Performance Reliability

- Electric Directional Lever allows operator to effortlessly change the direction of the forklift truck with just a flick of the finger.
- Performance mode selection allows operators to choose between power mode or economy mode.
- Speed Control for easily control the full speed of the truck by switching between three transmission speed simply through a dial switch.
- Electric Parking Brake System allows operator to effort lessly engage the park brake simply by the push of a button.
- Wide Visibility Cabin helps improve overall visibility through the elimination of front and rear pillars, also equip with air conditioner to fully cool down the cabin in a hot weather.
- Adjustable Suspension Seat allows operators to achieve maximum comfort not just by accommodating to thire preferred seating position only, but also swivels when operator needs more visibility to the rear.

FD160-230NE

TYPE	MODEL	CAPACITY	LOAD CENTER	MAX MAST HEIGHT
Internal Combustion Pneumatic Tyre	FD160NE	16000kg	900mm	6000mm
	FD180NE	18000kg	900mm	6000mm
	FD200NE	20000kg	900mm	6000mm
	FD230NE	23000/ 20000kg	900/1250mm	6000mm

GRENDIA GAS/LPG

Mitsubishi Forklift Trucks new FG series is a whole new breed of forklift truck that's been built from the ground up to meet the demands of users who require heavy duty, robust and reliable machines.

The latest in a series of forklift trucks, the new N-Generation has won accolades from its users for its capacity to work even in the most demanding situations while being friendly to the environment. What's more, these forklift trucks represents the latest in Mitsubishi transport technology, enhanced safety and commitment to keeping the world green.

- Integrated Presence System (IPS) prevents accidents caused by unexpected movement of unmanned forklift trucks
- Powerful lifting speed up to 640mm/s when loaded
- Smooth running
- Eco-friendly vehicle
- Lift lock prevents accidental forks lowering when keyswitch is off
- 44kw engine allows high lifting and travel speeds

FG15-FG35N

TYPE	MODEL	CAPACITY	LOAD CENTER	MAXIMUM MAST HEIGHT
Gasoline	FG15N	1500kg	500mm	7000mm
	FG15ZN	1500kg	500mm	7000mm
	FG18N	1750kg	500mm	7000mm
	FG18ZN	1750kg	500mm	7000mm
	FG20CN	2000kg	500mm	5500mm
	FG20N	2000kg	500mm	7000mm
	FG20ZN	2000kg	500mm	7000mm
	FG25N	2500kg	500mm	7000mm
	FG25ZN	2500kg	500mm	7000mm
	FG30N	3000kg	500mm	7000mm
	FG35N	3500kg	500mm	6000mm

FGE15-FGE35N

TYPE	MODEL	CAPACITY	LOAD CENTER	MAXIMUM MAST HEIGHT
Electronic Controlled Gasoline	FGE15N	1500kg	500mm	7000mm
	FGE18N	1750kg	500mm	7000mm
	FGE20CN	2000kg	500mm	5500mm
	FGE20N	2000kg	500mm	7000mm
	FGE20ZN	2000kg	500mm	7000mm
	FGE25N	2500kg	500mm	7000mm
	FGE25ZN	2500kg	500mm	7000mm
	FGE30N	3000kg	500mm	7000mm
	FGE35N	3500kg	500mm	6000mm

FG40-FG55N

TYPE	MODEL	CAPACITY	LOAD CENTER	MAXIMUM MAST HEIGHT
Gasoline	FG40N	4000kg	500mm	7000mm
	FG45N	4500kg	500mm	7000mm
	FG50CN	5000kg	500mm	7000mm
	FG50N	5000kg	600mm	7000mm
	FG55N	5500kg	600mm	6000mm

- Capacity rate is calculated at Mitsubishi manufacture standard mast height., without attachment
- The capacity might be varied due to the mast height or with attachment.

Please contact our sales consultant for more details.

GRENDIA'S ECO-POWER

MEETS THE ENVIRONMENTAL REQUIREMENTS OF TODAY AND TOMORROW

2007 EMISSION STANDARDS COMPLIANT*: NEW ELECTRONICALLY CONTROLLED GASOLINE ENGINE

Mitsubishi Grendia's advanced gasoline engine, which helped pioneer the standard use of electronically controlled fuel injection and three-way catalytic converters in forklift trucks, has evolved even further. The new Grendia has achieved remarkable environmental controls and complies with all 2007 Emission Standards while still maintaining high performance and reliability levels.

*** 2007 Emissions Standard for Specific Special Vehicles (including off-road vehicles)**

- Compliant with Emissions Standard for Specific Special Vehicles
- Ministry of the Environment
- Ministry of Economy, Trade and Industry
- Ministry of Land, Infrastructure and Transport

TWO-LEVEL HIGH/LOW SPEED LIMITER

The Grendia's automatic speed limiter can be set to two levels – outdoors (HIGH) and indoors (LOW). Drivers can alternate between the two speed limits at the flick of a switch, helping them to choose the most appropriate fuel efficiency for the location.

* Standard for Electronically Controlled Gasoline Engine Trucks

POWER/SOFT MODE SWITCH

Depending on the task, two power levels can be selected: POWER mode, which maximizes power output and SOFT mode for fuel efficiency and low noise levels. Selecting SOFT mode cuts CO2 emissions by approximately 13% compared to the POWER mode.

* Standard for Electronically Controlled Gasoline Engine Trucks

MITSUBISHI CLASIDIA FORKLIFT

Internal Combustion Pneumatic Tyre 2.0-3.0 ton

Designed to meet the needs of growing businesses. These versatile, durable and reliable forklifts carry out day-to-day goods unloading and loading and movement requirements.

Clasidia's straightforward layout and design allow for more legroom, headroom and visibility in the cab.

FD/FG20-30(H)S

CLASIDIA DETAIL

Performance

- 44KW of engine power at your command, powerful engine for all your applications.
- Improved heat balance through unique shape of counterweight. This allows efficient cooling which prevents over heating.
- Excellent basic performance in its class.
- Tight turning radius with a compact chassis.
- Easy and smooth steering with hydraulic power steering.

Comfort

- Uncluttered and logical laid out of cabin floor space.
- Adjustable tilt-steering angle for an ergonomic driving position.
- Soft Landing of forks on ground with minimum noise produced and load protection.
- Full floating powertrain that minimise vibration to cabin.

Safety

- Excellent fork visibility with display panel located on the cowl.
- Lift Lock that locks the lifting/lowering functions when key-off.
- Neutral Safety Start function.

Maintenance

- No complicated electronic components.
- Easy access to engine compartment with removable of side covers.
- Engine hood opens easily without having to adjust the steering column.

TYPE	MODEL	CAPACITY	LOAD CENTER	MAXIMUM MAST HEIGHT
Diesel	FD20HS	2000kg	500mm	5000mm
	FD25HS	2500kg	500mm	5000mm
	FD30HS	3000kg	500mm	5000mm
Gasoline	FG20S	2000kg	500mm	5000mm
	FG25S	2500kg	500mm	5000mm
	FG30S	3000kg	500mm	5000mm

- Capacity rate is calculated at Mitsubishi manufacture standard mast height., without attachment
- The capacity might be varied due to the mast height or with attachment.

Please contact our sales consultant for more details.

4 WHEEL ELECTRIC COUNTERBALANCED TRUCK

- ✓ IPX4 waterproof design
- ✓ Safety cruise limits truck to a safe speed when travelling on a downslope
- ✓ Ehanced safety with Travel and Hydraulics Operations
- ✓ Open-type mast provides superb visibility
- ✓ Clear display shows complete operating status at-a-glance
- ✓ In-built diagnostic to show fault through display and thus reduce truck downtime

FB10-35(L)CB

TYPE	MODEL	CAPACITY	LOAD CENTER	MAXIMUM MAST HEIGHT
Electric	FB10CB	1000kg	500mm	7000mm
	FB15CB	1500kg	500mm	7000mm
	FB18CB	1750kg	500mm	7000mm
	FB20CB	2000kg	500mm	7000mm
	FB25CB	2500kg	500mm	7000mm
	FB20LCB	2000kg	500mm	7000mm
	FB25LCB	2500kg	500mm	7000mm
	FB30CB	3000kg	500mm	7000mm
	FB35CB	3500kg	500mm	7000mm

FB35-45CZ

TYPE	MODEL	CAPACITY	LOAD CENTER	MAXIMUM MAST HEIGHT
Electric	FB35CZ	3500kg	600mm	5000mm
	FB40CZ	4000kg	600mm	5000mm
	FB45CZ	4500kg	600mm	5000mm

- Capacity rate is calculated at Mitsubishi manufacture standard mast height., without attachment
- The capacity might be varied due to the mast height or with attachment.

Please contact our sales consultant for more details.

ELECTRIC COUNTERBALANCED

The EDiA XL benefits from revolutionary features designed to give operators greater control than ever before. Electric differential lock provides optimum traction, and Four Wheel Steering ensures better grip and precision handling. EDiA XL is also equipped with AutoBoost for extra speed and power when you need it most.

EDiA XL has the power and performance to complete any task and overcome every challenge – making it the best alternative to an IC truck. EDiA XL is even proven to have the most efficient energy consumption in its class. So you keep going for longer, with zero emissions.

POPULAR FEATURE

- **Automatic parking brake with hill hold**
  The truck stops automatically when the accelerator is not engaged, preventing rolling on ramps. No need to remember to use a handle or switch.

- **Sensitive Drive System (SDS)**
  An intuitive driver-assist system for increased safety. Performance is managed according to steer angle and the velocity of foot and finger controls.

- **Intelligent Cornering System**
  The truck senses the angle of a turn and reduces speed early for maximum stability and accurate, positive cornering.

- **AutoBoost***
  Acceleration and torque boost functions provide more power when needed, such as on ramps.

- **Adaptive Lift Control (ALC)***
  Allows truck to remain stable with fewer movements when lowering loads from high heights.

- **Passive Sway Control**
  Minimises mast sway, especially in high lifts above 3m.

- **Four Wheel Steering (4WS)**
  Front axle drive motors turn in separate directions for better grip and precise handling. The rear axle steers through a full 100°, with dual drive motors for instant, smooth turning on the spot and no initial "push". This offers excellent manoeuvrability in tight spaces.

- **Comfortable cabin**
  The overall noise inside the cabin is just 65dB - that's similar to normal conversation level - providing a quiet and stress-free environment where the operator can focus on the task at hand.

- **Dual joysticks**
  Offering simultaneous lift and tilt functions, the ergo nomic dual joysticks have good grip, especially when used with gloves.

FB40-55(C)N(H) SERIES

* AutoBoost and ALC are all in-house designed 'patent pending' features.

TYPE	MODEL	CAPACITY	LOAD CENTER	MAXIMUM MAST HEIGHT
Electric	FB40N	4000kg	500mm	7000mm
	FB45N	4500kg	500mm	7000mm
	FB50CN	4990kg	500mm	7000mm
	FB50N	4990kg	500mm	7000mm
	FB50NH	5000kg	600mm	7000mm
	FB55NH	5500kg	600mm	7000mm

3 WHEEL ELECTRIC COUNTERBALANCED TRUCK

- ✓ Choices of ECONOMY or POWER modes to meet different operating needs
- ✓ Intelligent self diagnosis control system reduces time loss on maintenance and fault isolation
- ✓ Water resistant with IPX4 waterproof rating
- ✓ Wet disc brakes system
- ✓ Industry competitive turning radius to operate in space constraint environment
- ✓ Competitive AC technology with powerful travel speed up to 16.5km/hr
- ✓ Variation of different chassis models to operate in different aisle width
- ✓ Lifts up to 7m
- ✓ Superior pitching control system

FB13-20T(B)CB

TYPE	MODEL	CAPACITY	LOAD CENTER	MAXIMUM MAST HEIGHT
Electric	FB13TCB	1300kg	500mm	7000mm
	FB15TCB	1500kg	500mm	7000mm
	FB16TCB	1600kg	500mm	7000mm
	FB18TCB	1800kg	500mm	7000mm
	FB20TCB	2000kg	500mm	7000mm
	FB16TBCB	1600kg	500mm	7000mm
	FB18TBCB	1800kg	500mm	7000mm
	FB20TBCB	2000kg	500mm	7000mm

- Capacity rate is calculated at Mitsubishi manufacture standard mast height., without attachment
- The capacity might be varied due to the mast height or with attachment.

Please contact our sales consultant for more details.

WAREHOUSE TRUCKS

MITSUBISHI FORKLIFT TRUCKS

POWER PALLET TRUCK AND STACKER

Mitsubishi pallet transfer trucks are a popular solution for safe, quick and easy load handling in stores, warehouses and loading docks. With extremely strong, endurance-tested and well-protected construction, they feature fewer wear parts and a low energy consumption.

Designed to power through long shifts, they are easy to operate - even for unexperienced drivers - and are built to perform reliably even on uneven surfaces and in extreme conditions.

PBP16-20N2 (R)(E)

TYPE	MODEL	CAPACITY	LOAD CENTER
Standard Model	PBP16N2	1600kg	600mm
	PBP18N2	1800kg	600mm
	PBP20N2	2000kg	600mm
Pedestrian/Rider	PBP20N2R	2000kg	600mm
Pedestrian/Ergo-lift	PBP20N2E	2000kg*	600mm

PBP16PD

TYPE	MODEL	CAPACITY	LOAD CENTER
Standard Model	PBP16PD	1600kg*	600mm

PBV20-25N3

TYPE	MODEL	CAPACITY	LOAD CENTER
Electric	PBV20N3	2000kg	600mm
Electric	PBV25N3	2500kg	600mm

PBF20-25N3(R)(S)

TYPE	MODEL	CAPACITY	LOAD CENTER
Electric	PBF20N3R	2000kg	600mm
Electric	PBF20N3S	2000kg	600mm
Electric	PBF25N3R	2500kg	600mm
Electric	PBF25N3S	2500kg	600mm

- Load capacity may vary, due to application

Please contact our sales consultant for more details.

PBV20PD

TYPE	MODEL	CAPACITY	LOAD CENTER
Electric	PBV20PD	2000kg*	600mm

PWR30/40

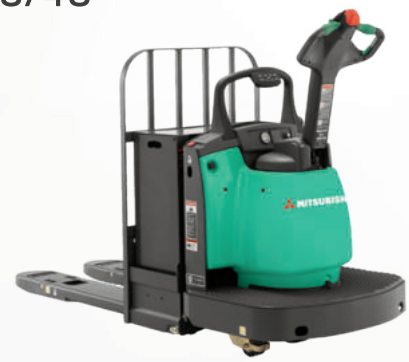

TYPE	MODEL	CAPACITY	LOAD CENTER
Electric	PWR30	2700kg	600mm
	PWR40	3600kg	600mm

SBV12-16P(I)(S)

TYPE	MODEL	CAPACITY	LOAD CENTER
Standard Model	SBV12P	1250kg	600mm
	SBV16P	1600kg	600mm
Initial Lift	SBV12P(I)	1250kg	600mm
	SBV16P(I)	1600kg	600mm
Straddle	SBV16P(S)	1600kg	600mm

SBP10-16N2(I)(R)(S)

TYPE	MODEL	CAPACITY	LOAD CENTER	MAXIMUM MAST HEIGHT
Standard Model	SBP10N2	1000kg	600mm	3300mm
Initial Lift	SBP12N2(I)	1200kg	600mm	4700mm
	SBP14N2(I)	1400kg	600mm	5400mm
	SBP16N2(I)	1600kg	600mm	5400mm
Initial Lift/ Rider	SBP12N2(I)R	1200kg	600mm	4700mm
	SBP14N2(I)R	1400kg	600mm	5400mm
	SBP16N2(I)R	1600kg	600mm	5400mm
Straddle	SBP16N2S	1600kg	600mm	5400mm
Straddle/Rider	SBP16N2SR	1600kg	600mm	5400mm

- Capacity rate is calculated at Mitsubishi manufacture standard mast height., without attachment
- The capacity might be varied due to the mast height or with attachment.

Please contact our sales consultant for more details.

REACH TRUCK

- Wide angle view at overhead guard and mast for greater visibility.
- Independent presence pedal and brake pedal to keep operator's legs within compartment.
- Shock reduction feature upon lowering down forks.
- AC powered truck with motors enables acceleration, brings efficiency.
- Intelligent suspension system provides better stability during movement.
- LCD Display for better visibility.
- Anti-slip feature for better stability and safety.

RBS10-30(L)CB1

TYPE	MODEL	CAPACITY	LOAD CENTER	MAXIMUM MAST HEIGHT
Electric	RBS10NCB1	1000kg	500mm	5000mm
	RBS12NCB1	1200kg	500mm	5000mm
	RBS12CB1	1200kg	500mm	6000mm
	RBS12LCB1	1200kg	500mm	6000mm
	RBS15CB1	1500kg	500mm	7500mm
	RBS18CB1	1800kg	500mm	8000mm
	RBS15LCB1	1500kg	500mm	7500mm
	RBS18LCB1	1800kg	500mm	8000mm

TYPE	MODEL	CAPACITY	LOAD CENTER	MAXIMUM MAST HEIGHT
Electric	RBS20CB1	2000kg	500mm	8000mm
	RBS25CB1	2500kg	500mm	8000mm
	RBS30CB1	3000kg	500mm	7000mm
	RBS20LCB1	2000kg	500mm	8000mm
	RBS25LCB1	2500kg	500mm	8000mm
	RBS30LCB1	3000kg	500mm	7000mm

- Capacity rate is calculated at Mitsubishi manufacture standard mast height., without attachment
- The capacity might be varied due to the mast height or with attachment.

Please contact our sales consultant for more details.

SIT ON REACH TRUCK (SUPERIOR MAST TYPE)

Reaching new heights of performance and business productivity

A warehouse can only perform as effectively as its trucks and their drivers. That's why every Mitsubishi reach truck is specially engineered to take any operator's performance to the next level.

With class-leading travel speeds of up to 14km/h, SENSiA reach trucks are easily tailored to your needs with a choice of two performance modes. While experienced drivers will fully exploit the high-performance capability of the Professional (PRO) mode, new or inexperienced warehouse staff will respond to the Ecologic (ECO) mode which has been configured to work naturally and economically in any environment. For more specific needs, the truck's settings can be customised by a service engineer.

Generous on operator space and comfort, SENSiA drives productivity higher through its futuristic fingertip control system – the most sensitive and accurate in the world. With its progressive, modulated fingertip response curves, it delivers a 'feel' and an accuracy that put drivers in total control. Together with the ergonomic armrest, SENSiA ensures operators stay focused, safe and productive – even through the longest shifts.

RB14-25N2

TYPE	MODEL	CAPACITY	LOAD CENTER	MAXIMUM MAST HEIGHT
Electric	RB14N2L	1400kg	600mm	7500mm
	RB14N2S	1400kg	600mm	7500mm
	RB14N2HS	1400kg	600mm	9000mm
	RB16N2L	1600kg	600mm	7500mm
	RB16N2S	1600kg	600mm	7500mm
	RB16N2HS	1600kg	600mm	11500mm
	RB16N2	1600kg	600mm	7500mm
	RB16N2C	1600kg	600mm	7500mm
	RB16N2HS	1600kg	600mm	9000mm
	RB16N2HC	1600kg	600mm	9000mm
	RB20N2H	2000kg	600mm	11500mm
	RB20N2X	2000kg	600mm	13000mm
	RB25N2X	2500kg	600mm	11500mm

- Capacity rate is calculated at Mitsubishi manufacture standard mast height., without attachment
- The capacity might be varied due to the mast height or with attachment.

Please contact our sales consultant for more details.

SIT ON REACH TRUCK (STANDARD MAST TYPE)

Electric Sit On Reach Truck 1.4-2.0 ton

The RBF-CA Series Reach Trucks are one of the most versatile and reliable truck series in the industry. Its powerful drive system and compact structure ensure that you will experience outstanding performance whether you are lifting, transporting or manoeuvring goods in the warehouse environment.

RBF14-20CA

TYPE	MODEL	CAPACITY	LOAD CENTER	MAXIMUM MAST HEIGHT
Electric	RBF14CA	1400kg	600mm	8000mm
	RBF16CA	1600kg	600mm	9000mm
	RBF20CA	2000kg	600mm	10000mm

- Capacity rate is calculated at Mitsubishi manufacture standard mast height., without attachment
- The capacity might be varied due to the mast height or with attachment.

Please contact our sales consultant for more details.

SIT ON MULTIWAY REACH TRUCK (SUPERIOR MAST TYPE)

The Mitsubishi SENSiA EX multi-way reach truck range is ideal for precise and intuitive handling of wide and unusual loads of up to 2500 kg - and lifting up to 10 metres - in narrow aisles and on long shifts.

Six multi-directional travel modes, all-wheel steering and braking and powerful AC traction combine to deliver exceptionally agile, high-intensity performance. Its wide forks make long handling exact and effortless.

Comfortable and spacious, the award-winning SENSiA cabin, SDS and operator controls provides excellent all-round visibility and minimises operator fatigue.

TOP FEATURES

- Six multiway driving modes, instantly selected by keypad - reach truck, lateral, parallel, auto-transition, rotational and agile cornering.
- Mitsubishi SDS (Sensitive Drive System) provides intuitive driver-assist with graduated performance management according to steer angle, foot and finger actuator velocity - significantly contributing to safety.
- AC power on all motors delivers smooth performance, high torque and precise control - through the longest shifts.
- Choice of 2000 kg and 2500 kg capacities for optimum application configuration.
- Smooth mast handling system on lift and reach for steady, predictable and precise handling.
- Wide fork positioner with up to 2200 mm spread and fork tilt for handling both long loads and standard pallets.
- Lift heights up to 10 metres for higher handling.

RBM20-25N2

TYPE	MODEL	CAPACITY	LOAD CENTER	MAXIMUM MAST HEIGHT
Electric	RBM20N2	2000kg	600mm	9500mm
	RBM25N2	2500kg	600mm	10000mm

- Capacity rate is calculated at Mitsubishi manufacture standard mast height., without attachment
- The capacity might be varied due to the mast height or with attachment.

Please contact our sales consultant for more details.

ORDER PICKER

Empower your operator transform your operations. Despite its ultracompact size, our VELiA ES range of low level order pickers is packed with smart features that will have your operations running more efficiently, productively, reliably and safer.

Its energy efficiency is top of its class. It's 14% more efficient than its closest competitor meaning you can work as leanly as possible. And its market-leading ergonomics mean your operators will be as comfortable (and productive) as possible – even through the longest shifts.

OPB12-25N2(F)(P)

TYPE	MODEL	CAPACITY	LOAD CENTER	FORK HEIGHT	PLATFORM HEIGHT
Battery	OPB20N2	2000kg	600mm	135mm	N/A
	OPB20N2P	2000kg	600mm	135mm	1000mm
	OPB20N2XP	2000kg	1200mm	765mm	1000mm
	OPB25N2	2500kg	600mm	135mm	N/A
	OPB25N2P	2500kg	600mm	135mm	1000mm
	OPB12N2F	1200kg	600mm	765/1115mm	N/A
	OPB12N2FP	1200kg	600mm	765/1115mm	1000mm

OPB20N2X(P)

TYPE	MODEL	CAPACITY	LOAD CENTER	FORK HEIGHT	PLATFORM HEIGHT
Battery	OPB20N2X	2000kg	1200mm	765mm	N/A

OPBL10P

TYPE	MODEL	CAPACITY	LOAD CENTER	FORK HEIGHT	PLATFORM HEIGHT
Electric	OPBL10P	1000kg	600mm	1850/ 2450mm	1200/1800mm

OPBM10P, OPBH12PH

TYPE	MODEL	CAPACITY	LOAD CENTER	FORK HEIGHT	PLATFORM HEIGHT
Electric	OPBM10P	1000kg	600mm	9025mm	8250mm
	OPBH12PH	1250kg	600mm	11275mm	10500mm

EOP15N3

TYPE	MODEL	CAPACITY	LOAD CENTER	FORK HEIGHT	PLATFORM HEIGHT
Electric	EOP15N3	1360kg	600mm	6775mm	6000mm

- Capacity rate is calculated at Mitsubishi manufacture standard mast height., without attachment
- The capacity might be varied due to the mast height or with attachment.

TOW TRUCK

Versatile pulling power and class-leading ergonomics. With a wealth of ergonomic and safety features, the TBR30-50N2 tow truck blends operator comfort, precision control and sheer strength to deliver efficient and reliable performance. Among many innovations is the model's userfriendly Maxius steering wheel and controls, which are combined with progressive steering, automatic speed reduction when cornering and automatic drive wheel centring to ensure total confidence when manoeuvring at all speeds.

Designed for indoor use, primarily within the automotive sector, the versatile TBR30-50N2 promises exceptional productivity. Its spacious, uncluttered operator compartment gives easy walkthrough access, while its large, non-slip working platform acts as a 'deadman' pedal – allowing movement only when an operator stands on it. Speed and other parameters can be programmed to suit the application and the operator. Maximum drive speed is 12 km/h when the operator is riding but a safe limit of 2.5km/h is automatically set when thetruck is switched to walk-beside mode.

Frame and body

- Low centre of gravity adds further stability, for safer operation.
- Robust construction offers exceptional durability in all working conditions.

Drive

- Powerful AC drive means high drive speed (up to 12km/h) and acceleration – even when loaded – plus smooth, quiet, controlled operation, extended shift length and lower maintenance requirements.
- Suspended drive unit ensures a comfortable ride.

Steering system

- Advanced electric steering allows precise control at all speeds, with automatic speed reduction in curves and automatic drive wheel centring.
- Small turning circle together with responsive steering and compact chassis results in exceptional manoeuvra bility.

Brakes

- Regenerative braking gives effective control, with no brake wear, and extends shift life.
- Automatic speed reduction at corners improves safety.

TBR30-50N2

TYPE	MODEL	CAPACITY	RATED DRAWBAR PULL
Electric	TBR30N2	3000kg	600mm
	TBR50N2	5000kg	1000mm

- Load capacity may vary, due to application

Please contact our sales consultant for more details.

PANTOGRAPH REACH TRUCK

ADVANCED TECHNOLOGY SAVES ENERGY AND TIME FOR GREATER PRODUCTIVITY.

The ESR series delivers the efficiency and performance that your operation demands.

Exceptional Performance, Exceptional Value: Mitsubishi Forklift Trucks developed the ESR series of reach trucks to deliver superior performance – at an exceptional value. Featuring advanced AC technology, this series is designed to reach new heights quickly and efficiently for greater productivity, shift after shift.

ESR20-23N2, EDR18N2

TYPE	MODEL	CAPACITY	LOAD CENTER	MAXIMUM MAST HEIGHT
Electric (Single Reach)	ESR20N2	1810kg	600mm	9296mm
	ESR23N2	2040kg	600mm	11430mm
	EDR18N2	1580kg	600mm	11430mm

VERY NARROW AISLE TRUCK

A true VNA specialist, the ELEViA series is optimised for easy order picking and pallet handling in narrow aisle spaces.

With intuitive controls, an ergonomic, spacious cabin and excellent visibility, ELEViA is an operator's dream. Modular design and engineering make it highly configurable.

Each model in the range is fully optimised for a specific type of application, making for a comprehensive and versatile selection of trucks. The 1.1-1.3-tonne models are available with 48v or 80v electrical systems, while larger models are 80v only.

VNT11-20(XL)

TYPE	MODEL	CAPACITY	LOAD CENTER	MAXIMUM MAST HEIGHT
Electric	VNT11	1100kg	600mm	7320mm
	VNT12	1200kg	600mm	8320mm
	VNT13	1300kg	600mm	8320mm
	VNT14	1350kg	600mm	12320mm
	VNT15	1500kg	600mm	12302mm
	VNT15XL	1500kg	600mm	14320mm
	VNT20	2000kg	600mm	11820mm

- Capacity rate is calculated at Mitsubishi manufacture standard mast height., without attachment
- The capacity might be varied due to the mast height or with attachment.

Please contact our sales consultant for more details.

WAREHOUSE TRUCKS

MLift, we position ourselves as the leading material handing specialists, take pride and put in relentless effort to understand each industry challenges and deliver unique LIFT SOLUTIONS to optimize productivity for business.

We uphold our core belief in developing trucks that possess high-level MOBILITY to accomplish high demanding tasks with an exceptional touch of practical and realistic design to suit most application requirements.

POWER PALLET TRUCK

PBP12E

PBP15E

PBP15E2

PBP18E

MODEL	TYPE	CAPACITY (KG)	LOAD CENTER (MM)	BATTERY	MOTOR
PBP12E	Electric Pallet Truck	1200	600	24V(Li-Ion)	DC Drive
PBP15E	Electric Pallet Truck	1500	600	24V(2x12V)	DC Drive
PBP15E2	Electric Pallet Truck	1500	600	24V(2x12V)	DC Drive
PBP18E	Electric Pallet Truck	1800	600	24V(2x12V)	AC Drive

- Load capacity may vary, due to application

Please contact our sales consultant for more details.

PBP20EA-PBP25EA

MODEL	TYPE	CAPACITY (KG)	LOAD CENTER (MM)	BATTERY	MOTOR
PBP20EA	Electric Pallet Truck	2000	600	24V(Wet cells)	AC Drive
PBP25EA	Electric Pallet Truck	2500	600	24V(Wet cells)	AC Drive

PBV20EAL

MODEL	TYPE	CAPACITY (KG)	LOAD CENTER (MM)	BATTERY	MOTOR
PBV20EAL	Electric power pallet	2000	600	24V Li-ion	AC Drive

- Load capacity may vary, due to application

Please contact our sales consultant for more details.

POWER PALLET STACKER

SBP12E

MODEL	TYPE	CAPACITY (KG)	LOAD CENTER (MM)	BATTERY	MOTOR	MAXIMUM MAST HEIGHT (MM)
SBP12E	Electric Power Stacker Truck	1200	600	24V(2x12V AGM)	DC (Lift/Drive/Pump)	3600

SBP12ES-SBP18EAS

MODEL	TYPE	CAPACITY (KG)	LOAD CENTER (MM)	BATTERY	MOTOR	MAXIMUM MAST HEIGHT (MM)
SBP12ES	Electric Power Stacker Truck	1200	600	24V(2x12V AGM)	DC (Lift/Drive/Pump)	3600
SBP12EAS	Electric Power Stacker Truck	1200	600	24V (Lead acid)	AC Drive only	4500
SBP14EAS	Electric Power Stacker Truck	1400	600	24V (Lead acid)	AC Drive only	5000
SBP18EAS	Electric Power Stacker Truck	1800	600	24V (Lead acid)	AC Drive only	5000

- Capacity rate is calculated at Mitsubishi manufacture standard mast height., without attachment
- The capacity might be varied due to the mast height or with attachment.

Please contact our sales consultant for more details.

SBXP15EA

MODEL	TYPE	CAPACITY (KG)	LOAD CENTER (MM)	BATTERY	MOTOR	MAXIMUM MAST HEIGHT (MM)
SBXP15EA	Electric Power Stacker Truck	1500	600	24V (Lead acid)	AC Drive only	5500

SBP16EA

MODEL	TYPE	CAPACITY (KG)	LOAD CENTER (MM)	BATTERY	MOTOR	MAXIMUM MAST HEIGHT (MM)
SBP16EA	Electric Power Stacker Truck	1600	600	24V (Lead acid)	AC Drive only	5500

- Capacity rate is calculated at Mitsubishi manufacture standard mast height., without attachment
- The capacity might be varied due to the mast height or with attachment.

Please contact our sales consultant for more details.

TOW TRUCK

TBR30EA-TBR45EA

MODEL	TYPE	CAPACITY (KG)	RATED DRAWBAR PULL (MM)	BATTERY	MOTOR
TBR30EA	Electric Tractor	3000	600	24V	AC Drive
TBR45EA	Electric Tractor	4500	900	24V	AC Drive

TBS30EA-TBS60EA

MODEL	TYPE	CAPACITY (KG)	RATED DRAWBAR PULL (MM)	BATTERY	MOTOR
TBS30EA	Electric Tractor	3000	750	48V	AC Drive
TBS60EA	Electric Tractor	6000	1200	48V	AC Drive

- Load capacity may vary, due to application

Please contact our sales consultant for more details.

ORDER PICKER

MODEL	TYPE	RATED CAPACITY ON FRONT PLATFORM (KG)	RATED CAPACITY ON STANDING PLATFORM (KG)	BATTERY	MOTOR	MAXIMUM PLATFORM HEIGHT (MM)
OPB3E	Medium Level Order Picker	90	136	24V	DC Drive	3000mm

OPB5E

MODEL	TYPE	RATED CAPACITY ON FRONT PLATFORM (KG)	RATED CAPACITY ON STANDING PLATFORM (KG)	BATTERY	MOTOR	MAXIMUM PLATFORM HEIGHT (MM)
OPB5E	Medium Level Order Picker	227	136	24V	AC Drive	3200(min)/4880(Max)

- Load capacity may vary, due to application

Please contact our sales consultant for more details.

LITHIUM-ION BATTERIES

LI ION

LI-ION BATTERY TECHNOLOGY

AVAILABLE MODELS FOR LITHIUM-ION BATTERY

FB10-25CB | FB13-20TCB | RBS10-25CB1

LITHIUM-ION BATTERIES

The dynamics of the logistics business are changing the requirements placed on warehouse equipment and forklifts. The Li-ion technology has proven its worth in everyday use and is a good alternative energy source for a multishift warehouse.

LI ION
LI-ION BATTERY TECHNOLOGY

Extremely Safe:
- Fully sealed battery means not spillage.
- No gassing during charging.
- No battery swapping related accidents.

Long Battery Life:
- Expected to last up to around 10 years and charge cycles of about 4000 cycles.

Zero Emission and Gassing:
- Batteries are fully sealed and no gases are emitted during charging.

Zero Maintenance:
- No regular checking, cleaning and water top up of battery.

Cost Saving:
- Save more through reduced maintenance and accidents.

Charge whenever needed:
- Charge whenever there are opportunities like tea breaks or lunch. breaks without the fear of reduced battery life span.

Speedy Charging:
- Extremely fast charging of about 2~3 hours depending on the battery

COMPARISON BETWEEN LI-ION AND LEAD ACID BATTERY		
Type	Lithium Iron Phosphate (LiFePO4)	Lead Acid
Life span & Cycle	10 years, 4000 charge cycles	4 years, 1200 charge cycles
Operation Temperature	-20~60 C	-5~45 C
Achievable Capacity	70~80%	40~50%
Power Density	125W/kg	40W/kg
Battery Weight	33% of lead acid	100% of lead acid
Regular Maintenance	No	Yes
Charging Time	Fast, around 2 hours	Slow, around 8 hours

FORKLIFT ATTACHMENT

FORKLIFT TRUCK FOR THE PAPER INDUSTRY

Capable of handling paper rolls effectively. Capable of handling small-diameter paper roll with a movable short arm. Improved contact pads provides better grips on rolls. Capable of handling two rolls of paper with different diameters (Special Request Option).

- Attachment installed: Roll Clamp
- Mast installed: Heavy Duty Mast
- Recommended option: Hydraulic Oil Cooler

FORKLIFT TRUCK FOR THE RECYCLED PAPER INDUSTRY

Excellent insert clamp-arm to grip paper bales safely and securely. Wide view between clamp cylinders.

- Attachment installed: Bale Clamp
- Recommended option: Hydraulic Oil Cooler / Semi-under Net Kit

FORKLIFT TRUCK FOR THE TIMBER INDUSTRY

This forklift truck has a hinged fork and back rest to scoop and carry logs and sawn timber.

- Standard: Panoramic Hinged Fork (fixed type back rest)
- Recommended option: Air Intake Pre-Cleaner / Front Windshield / Dust Proof Net for Radiator

FORKLIFT TRUCK FOR THE QUARRY INDUSTRY

This forklift truck has a hinged fork and fixed back rest that can move and carry stone without damage. It provides excellent handling and grip, even in bad road conditions.

- Standard: Panoramic Hinged Fork (fixed back rest)
- Recommended option: Air Intake Pre-Cleaner / Front Windshield / Dust Proof Net for Radiator

FORKLIFT TRUCK FOR THE MARINE / PORT INDUSTRY

This forklift truck is designed to work in confined spaces such as inside vessels or containers. The three-stage full free mast has a wide front view, and it can be used for high shelves loading - making full use of cargo space.

- Standard: Wide view Three-stage Full Free Mast
- Recommended options: Diesel Particulate Filter / Front Windshield

Tough reliable
and built to work
as hard as you do
MITSUBISHI
70
MORE ENQUIRIES,
PLEASE CONTACT US AT

MOBILE ELEVATING WORK PLATFORM

An Oshkosh Corporation Company

SOLUTION SERVICE

The Access Safety Equipment Solution (ASE) Program of UMWS provides the following facilities for our customers.

- Sale New & Used Equipment
- Service Contract and Spare Parts Programs for Purchased Products
- Repairing, Maintaining and Providing Spare Parts
- Operation Training
- Technical Training

ACCESS SAFETY EQUIPMENT

UMWS provides excellent value over its life cycle – value that is enhanced by our attention to maintenance, service, parts, training, machine reliability, and machine versatility.

JLG
E600
JLG

ELECTRIC & HYBRID BOOM LIFTS

Our line of electric and hybrid boom lifts are environmentally friendly, energy efficient and help keep productivity high. From job start to completion, JLG has an electric boom lift to meet your needs and keep your job green.

E300AJP-EC520AJ

TYPE	MODEL	MAX PLATFORM HEIGHT (M)	MAX PLATFORM CAPACITY (KG)
Articulating Boom Lifts	E300AJP	8.96	227
	E450AJ	13.72	227
	EC450AJ	13.72	250
	EC520AJ	16.00	250

EC600SJ-EC600SJP

TYPE	MODEL	MAX PLATFORM HEIGHT (M)	MAX PLATFORM CAPACITY (KG)
Electric & Hybrid Boom Lifts	EC600SJ	18.36	227
	EC600SJP	18.39	227

H340AJ

TYPE	MODEL	MAX PLATFORM HEIGHT (M)	MAX PLATFORM CAPACITY (KG)
Articulating Boom Lifts	H340AJ	10.28	227

H800AJ

TYPE	MODEL	MAX PLATFORM HEIGHT (M)	MAX PLATFORM CAPACITY (KG)
Articulating Boom Lifts	H800AJ	24.38	227

JLG LIFT
JLG
www.jlg.com
460SJ

TELESCOPIC BOOM LIFTS

When you need to work around different angles on crowded job sites, it's important to have the right piece of equipment to get you straight to the source. JLG® engine powered telescopic boom lifts are ideal for work that requires extended horizontal and vertical outreach. Our telescopic lifts take you right where you need to work while providing you with the height and capacity you need.

400S-460SJ

TYPE	MODEL	MAX PLATFORM HEIGHT (M)	MAX PLATFORM CAPACITY (KG)
Telescopic Boom Lifts	400S	12.19	272/454
	460SJ	14.05	272

600S-660SJ

TYPE	MODEL	MAX PLATFORM HEIGHT (M)	MAX PLATFORM CAPACITY (KG)
Telescopic Boom Lifts	600S	18.18	272/454
	660SJ	20.02	249/340

800S-860SJ

TYPE	MODEL	MAX PLATFORM HEIGHT (M)	MAX PLATFORM CAPACITY (KG)
Telescopic Boom Lifts	800S	24.38	227/454
	860SJ	26.21	227/340

1100SJ

TYPE	MODEL	MAX PLATFORM HEIGHT (M)	MAX PLATFORM CAPACITY (KG)
Telescopic Boom Lifts	1100SJ	33.50	250

1200SJP-1850SJ

TYPE	MODEL	MAX PLATFORM HEIGHT (M)	MAX PLATFORM CAPACITY (KG)
Ultra Series	1200SJP	36.58	227/454
	1350SJP	41.15	227/454
	1500SJ	45.70	227/454
	1850SJ	56.56	227/454

400SC-660SJC

TYPE	MODEL	MAX PLATFORM HEIGHT (M)	MAX PLATFORM CAPACITY (KG)
Straight - Crawler	400SC	12.05	272/454
	460SJC	13.88	272
	660SJC	19.99	249/340

340AJ

TYPE	MODEL	MAX PLATFORM HEIGHT (M)	MAX PLATFORM CAPACITY (KG)
Articulating	340AJ	10.33	227

450AJ

TYPE	MODEL	MAX PLATFORM HEIGHT (M)	MAX PLATFORM CAPACITY (KG)
Articulating	450AJ	13.72	250

520AJ

TYPE	MODEL	MAX PLATFORM HEIGHT (M)	MAX PLATFORM CAPACITY (KG)
Articulating	520AJ	16.00	250

600AJ

TYPE	MODEL	MAX PLATFORM HEIGHT (M)	MAX PLATFORM CAPACITY (KG)
Articulating	600AJ	18.47	227

800AJ

TYPE	MODEL	MAX PLATFORM HEIGHT (M)	MAX PLATFORM CAPACITY (KG)
Articulating	800AJ	24.38	227/454

1250AJP-1500AJP

TYPE	MODEL	MAX PLATFORM HEIGHT (M)	MAX PLATFORM CAPACITY (KG)
Articulating	1250AJP	38.10	227/454
	1500AJP	45.72	272/454

400SJ HC3

TYPE	MODEL	MAX PLATFORM HEIGHT (M)	MAX PLATFORM CAPACITY (KG)
Hi Capacity	400S HC3	12.19	300/340/454
	460SJ HC3	14.05	300/340/454

660S HC3-660SJ HC3

TYPE	MODEL	MAX PLATFORM HEIGHT (M)	MAX PLATFORM CAPACITY (KG)
Hi Capacity	600S HC3	18.18	300/340/454
	660SJ HC3	20.02	300/340/454

800S HC3-800SJ HC3

TYPE	MODEL	MAX PLATFORM HEIGHT (M)	MAX PLATFORM CAPACITY (KG)
Hi Capacity	800S HC3	24.38	227/340/454
	800SJ HC3	26.21	227/340/454

JLG
TOUCAN 26E
www.jlg.com
JLG

TOUCAN® MAST BOOM LIFTS

SWith the JLG Toucan® vertical mast lift, you can meet your overhead challenges head-on. Work up, over and around assembly lines, shelving, ductwork or partitions more easily and without interferences. These mast boom lifts feature thick rubber non-marking tires, clean and efficient electric power and 25% gradeability.

HIGHER PERFORMANCE IS WITHIN REACH.

JLG helps you rise to the challenge of narrow operating spaces with the Toucan® Series of compact vertical mast lifts. The JLG Toucan Series provides enhanced accessibility in many situations, with greater vertical and horizontal reach to operate up, around and over obstacles in constricted indoor and outdoor spaces. This makes the Toucan ideal for today's industrial, maintenance, retail and food manufacturing segments.

KEY FEATURES

Boost Productivity

The Toucan has capacity for two workers and supplies plus industry-leading duty cycles to keep you on the job longer. With the mast lowered and the jib retracted, these compact machines will fit through doorways, between heavy machinery and all around congested work areas. So even when space is limited, your productivity isn't.

Indoor/Outdoor Versatility

With thick rubber non-marking tires for extra cushioning, clean and efficient electric power and 25% gradeability, Toucan Series mast booms can boost your productivity on improved surfaces indoors and outdoors.

Improved Positioning Capabilities

With up to 7.12 m of up and over height and 6.05 m horizontal reach, proportional controls and a 345-degree rotating mast, the Toucan mast booms make it easier to get close to your work.

TOUCAN T8E-T12E PLUS

TYPE	MODEL	MAX PLATFORM HEIGHT (M)	MAX LATFORM CAPACITY (KG)
Toucan Series	T8E	6.15	200
	T10E	8.10	200
	T12E	9.83	200
	T12E Plus	10.65	200

JLG LIFT
K20PLUS
Frames Conservatories
Direct
IPA GREENE KING
GREENE KING IPA
OFFICIAL BEER BURY RUGBY
IPA GREENE KING
JLG

COMPACT CRAWLER BOOM LIFTS

HIGHER PERFORMANCE IS WITHIN REACH.

Compact Crawler Boom lifts are available in Seven models with working heights ranging from 13.30 m to 32.48 m. Whether you're working indoors or outside, the Compact Crawler Boom has your job covered. With enhanced maneuverability and better access, you've got the ability to go more places thanks to its low profile, non-marking tracks and compact dimensions.

KEY FEATURES

Compact and Highly Maneuverable

JLG® Compact Crawlers feature a tracked wheel carriage that climbs steps and a narrow chassis for access through gates, yards and doorways. And their compact dimensions and low weight enable easier transport.

Clean, Quiet Operation

Each JLG® Compact Crawler is fitted with a 220V electrical motor as standard. (X33JP: 380V) An optional market-leading Lithium-ion battery power system for cleaner, greener operation makes these machines environmentally friendly. An ideal solution when working indoors, as no noise or emissions is created.

Operator Convenience

JLG® Compact Crawlers are equipped with a control that can be removed from the platform, enabling the operator to remotely operate the machine. Load sensing underneath the platform will automatically restrict the work envelope and cut-out all functions. Models also feature auto-stabilization-with one push of a button the machine automatically sets and levels.

X13JP-X33JP

TYPE	MODEL	MAX PLATFORM HEIGHT (M)	MAX PLATFORM CAPACITY (KG)
Compact Crawler	X13JP	11.3	230
	X15JP	13.40	230
	X17JP	14.96	230
	X20JP	18.05	230
	X23J	21.10	120/200
	X26JP	23.70	230
	X33JP	30.48	230

JLG

SCISSOR LIFTS ELECTRIC POWERED AND ENGINE POWERED

JLG® scissor lifts deliver long lasting performance for a more productive day. Electric scissor lifts enhance your productivity with less recharging and more uptime. These machines are designed so you have fewer scheduled services, a quieter work area and zero emissions.

JLG® engine powered scissor lifts are designed for applications that require more workspace and more lifting capacity. These rough terrain models make it easier to maneuver through the roughest job sites.

Scissor lifts are perfect for a wide variety of applications.

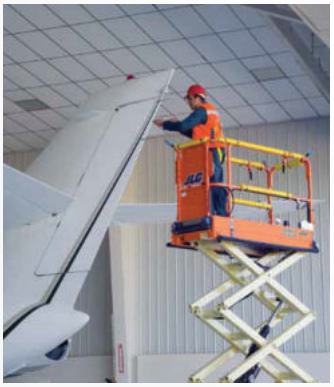

AVIATION

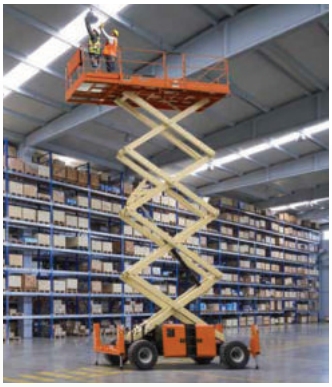

INTERIOR CONSTRUCTION

EXTERIOR CONSTRUCTION

FACILITY MAINTENANCE

ES1330L – ES3246

TYPE	MODEL	MAX PLATFORM HEIGHT (M)	MAX PLATFORM CAPACITY (KG)
Electric Scissor Electric Drive	ES1330L	3.80	227
	ES1530L	4.50	227
	ES1932i	5.80	230
	ES1932	5.80	230
	ES2632	7.77	230/125
	ES3246	9.75	320/230

AE1932

TYPE	MODEL	MAX PLATFORM HEIGHT (M)	MAX PLATFORM CAPACITY (KG)
Electric Scissor All Electric	AE1932	5.80	275

RT SERIES

TYPE	MODEL	MAX PLATFORM HEIGHT (M)	MAX PLATFORM CAPACITY (KG)
Diesel/Dual Fuel Rough Terrain	RT2669	7.98	680 (Single Ext)
	RT3369	9.96	454 (Single Ext)
	RT4069	12.20	362 (Single Ext)
	RT4769	14.33	362 (Single Ext)

LRT SERIES

R SERIES

TYPE	MODEL	MAX PLATFORM HEIGHT (M)	MAX PLATFORM CAPACITY (KG)
Electric Scissor	R1532i	4.50	275
	R1932i	5.80	230
	R1932	5.80	230
	R2632	7.77/6.40	230/125
	R3246	9.75	320/230
	R4045	12/8.80	350/250

ERT SERIES

TYPE	MODEL	MAX PLATFORM HEIGHT (M)	MAX PLATFORM CAPACITY (KG)
Electric Rough Terrain	ERT2669	7.98	680 (Single Ext)
	ERT3369	9.96	454
	ERT4069	12.20	362
	ERT4769	14.33	362

TYPE	MODEL	MAX PLATFORM HEIGHT (M)	MAX PLATFORM CAPACITY (KG)
Diesel/Dual Fuel Large Rough Terrain	330LRT	10.06	1,020 (Single Ext)
	430LRT	13.11	680 (Single Ext)
	530LRT	16.20	680 (Single Ext)

VERTICAL LIFTS

When your maintenance or repair work requires you to reach overhead in tight spaces, you need vertical lift solutions that deliver full access with the productivity to finish those pressing tasks. Our range of driveable and push-around vertical lifts are an efficient and productive way to tackle up and over work. They're also a safer, more efficient alternative to ladders, giving you a confidence boost while completing the job.

Vertical lifts are perfect for a wide variety of applications.

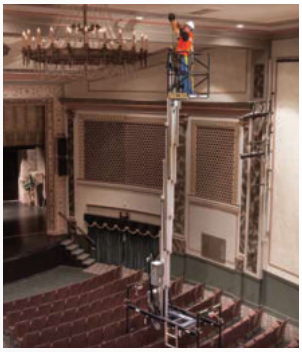

PUBLIC BUILDINGS

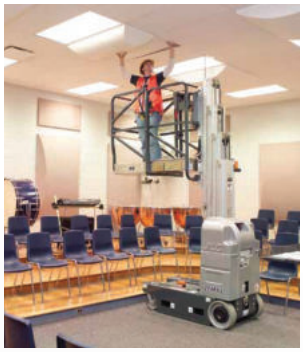

SCHOOLS

EXTERIOR BUILDING MAINTENANCE

INTERIOR CONSTRUCTION

25AM AC-38AM DC

TYPE	MODEL	MAX PLATFORM HEIGHT (M)	MAX PLATFORM CAPACITY (KG)
Vertical Push Around	25AM AC	9.45	160
	25AM DC	9.45	160
	30AM AC	10.88	136
	30AM DC	10.88	136
	38AM AC	13.40	136
	38AM DC	13.40	136

10MSP-20MVL

TYPE	MODEL	MAX PLATFORM HEIGHT (M)	MAX PLATFORM CAPACITY (KG)
Vertical Self Propelled	10MSP	3.05	272
	1230ES	3.66	230
	DSP - M	4.55	220
	20MSP	5.96	181
	20MVL	5.81	159

PECOLIFT

TYPE	MODEL	MAX PLATFORM HEIGHT (M)	MAX PLATFORM CAPACITY (KG)
Low-Level Access	PecoLift	1.50	150

ECOLIFT

TYPE	MODEL	MAX PLATFORM HEIGHT (M)	MAX PLATFORM CAPACITY (KG)
Low-Level Access	EcoLift	2.20	150

NANO SP

TYPE	MODEL	MAX PLATFORM HEIGHT (M)	MAX PLATFORM CAPACITY (KG)
Low-Level Access	Nano SP Zero	2.50	200
	Nano SP	2.50	200
	Nano SP Plus	2.50	200

POWER TOWER NANO

TYPE	MODEL	MAX PLATFORM HEIGHT (M)	MAX PLATFORM CAPACITY (KG)
Low-Level Access	Power Tower Nano	2.50	200
	Power Tower	3.10	250

JLG TELEHANDLERS

The lineup of JLG all-wheel steer telehandlers gives you all the power, reliability and maneuverability you need for a highly productive day. Single joystick controls provide easier boom positioning, a tight turning radius helps you get around crowded areas while a variety of attachments increase your versatility. Our five full-size models and one compact model allow you to handle any job site challenge with ease.

G5-18A

TYPE	MODEL	RATED CAPACITY (KG)	MAX LIFT HEIGHT (M)	LOAD AT MAX LIFT HEIGHT (KG)
Telehandlers	G5-18A	2495	5.6	1996

3614RS

TYPE	MODEL	RATED CAPACITY (KG)	MAX LIFT HEIGHT (M)	LOAD AT MAX LIFT HEIGHT (KG)
Telehandlers	3614RS	3600	14	3000

8010H

TYPE	MODEL	RATED CAPACITY (KG)	MAX LIFT HEIGHT (M)	LOAD AT MAX LIFT HEIGHT (KG)
Telehandlers	8010H	7600	9.65	4491

4017RS

TYPE	MODEL	RATED CAPACITY (KG)	MAX LIFT HEIGHT (M)	LOAD AT MAX LIFT HEIGHT (KG)
Telehandlers	4017RS	4000	17.1	2500

7013H

TYPE	MODEL	RATED CAPACITY (KG)	MAX LIFT HEIGHT (M)	LOAD AT MAX LIFT HEIGHT (KG)
Telehandlers	7013H	7100	13.28	3062

TELEHANDLERS ATTACHEMENT

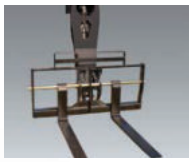

Standard Carriage

Forks that are fully floating and adjustable side-to-side for efficient load entry and exit.

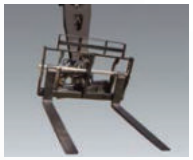

Side-Tilt Carriage

Allows for minor lateral positioning of the load during final placement.

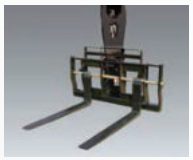

Swing Carriage

Allows for greater versatility in moving and placing materials in confined areas or when exact positioning is required.

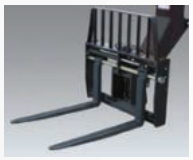

Dual Fork Positioning Carriage

Provides the ability to adjust the position of each fork independently, allowing the operator to handle a variety of palletized loads without having to leave the cab.

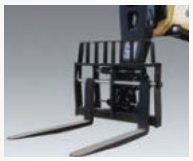

Side-Shift Carriage

Four-inch left and right carriage shift allows for precision load placement.

Grapple Bucket

Features a hydraulic grapple arm to assist in job site cleanup.

Pipe Grapple

For handling multiple pipes or a larger

Material Handling Arm

Designed for lifting and placing objects around the job site, the material handling arm is ideal for building construction and civil engineering applications.

Truss Boom

Allows operator to set trusses and wall sections for wood and steel building construction. Available with or without winch.

Pallet Forks

Rugged design makes it easier to handle heavy palletized material.

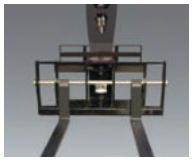

Lumber Forks

Wider width provides a larger surface area for stability when transporting longer material.

Cubing Forks

Allows operator to load, unload and place cubes of brick and block

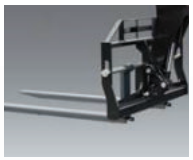

Fork Extensions

Fork extensions provide additional support to lift large or long objects. They are made with heavy duty steel and a pin is used to secure them to the existing telehandler forks.

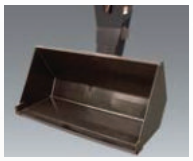

Material Bucket

Clean up the job site, spread gravel or for loading and leveling.

Fork-Mounted Work Platform

Extend the capabilities of your telehandler and get more work done by lifting material and persons to working heights.

Lifting Hook

Add versatility to any standard carriage by lifting and lowering objects without changing attachments.

Coupler-Mounted Lifting Hook

For lifting and lowering objects.

Trash Hopper

For collecting trash on the job site, with automatic opening and self-closing.

High reach

Confident control

MORE ENQUIRIES,
PLEASE CONTACT US AT

AUTOMOTIVE GARAGE SOLUTION

STEER TOWARDS THE BEST

Understanding the automotive and garage business extremely well has allowed us to become the one-stop automotive equipment resource for large and small shops. We carry an extensive product line from the finest manufacturers, who have a reputation for quality and value from all over the world.

Besides offering the best tire pressure sensor, wheel balancer, tire changer, brake lath, air compressors, battery charger and other auto shop tools, we offer a professional and friendly service. We use our experience and knowledge to steer customers toward the best product for their needs.

We can help you to improve your bottom line and get a good return on your investment.

BRAKE LATHE

Durable and cost-saving, our popular models, are available to meet every level of lathing requirement for trucks. All parts are offered together with efficient maintenance services.

WHEEL BALANCER

TYRE CHANGER

BATTERY TESTER

WHEELED CHARGER

WHEELED CHARGER

To charge the first cycle of battery is vitally important. Our automatic charger designed by the quality technology can control heat to ensure effectiveness of the battery element sheet. A variety of high performance products chosen for our customers include battery chargers, battery starters for all types of battery and battery testers.

TYRE CHANGER

WHEEL BALANCER

TRUCK TYRE CHANGER

Our piston and screw air compressors with the ISO 14000 standard on quality assurance and environmental management reduce noise pollution, heat and energy consumption. They are good options for new business operators looking for equipment to pass their test criteria or ISO certification audits and to save more on electricity bills. We sell air compressors of all sizes you may need as well as other models for general usage by business operators and small industries. Their quality however is referred to those used in large-scale industrial plants.

AIR COMPRESSOR

AIR COMPRESSOR

ERGO LINE
SUP
MONDOLFO FERRO
AQUILA
AS 944 LL TI 2V

COMBINATION BRAKE LATHES

JBC401BL

JBC201BL

Heavy, Innovative, Fast

- Allows for a quick changeover from disc to drum tools in seconds
- Constructed from industrial strength material
- Design to handle all brake resurfacing needs
- Optional workbench and tool board available for increased productivity and ergonomics

TYPE	MODEL	MAX ROTOR DIAMETER	MAX ROTOR FACE WIDTH	MAX ROTOR FACE THICKNESS	DRUM DEPTH	MAX DRUM DIAMETER
Brake Lathe	JBC401BL	30”	5”	3"	9"	30”
Brake Lathe	JBC201BL	18”	4"	3"	4"	14”

TYRE CHANGER

60X

70X-3

80X

90X

TYPE	MODEL	RIM DIAMETER	MAX TYRE DIAMETER	MAX RIM WIDTH	WHEEL CLAMPING SYSTEM	AIR DRIVEN SYSTEM	ELECTRIC DRIVE SYSTEM	HELPER DEVICES	BEAD SEATING AIR VOLUM
Tyre Changer	60X	6" - 24" External	50" Max	14" Max	4 Clamps, Air Cylinder Operated	1.5 HP Air Motor, 110 - 175 psi, 15 scfm	1 HP Electric Motor, 115 V, 60 Hz, 15 amp	Robo-Arm® (18" of Automated Vertical Stroke)	5.4 Gallons in Tower
Tyre Changer	70X-3	6" - 24" External	50" Max	14" Max	4 Clamps, Air Cylinder Operated	1.5 HP Air Motor, 110 - 175 psi, 15 scfm	1 HP Electric Motor, 115 V, 60 Hz, 15 amp	Robo-Arm® (18" of Automated Vertical Stroke)	5.4 Gallons in Tower
Tyre Changer	80X	6" - 24" External	50" Max	14" Max	4 Clamps, Air Cylinder Operated	1.5 HP Air Motor, 110 - 175 psi, 15 scfm	2 HP Electric Motor, 220 V, 60 Hz, 14 amp	Robo-Arm® (18" of Automated Vertical Stroke) RoboRoller™	5.4 Gallons in Tower
Tyre Changer	90X	6" - 28" External	50" Max	14" Max	4 Clamps, Air Cylinder Operated	1.5 HP Air Motor, 110 - 175 psi, 15 scfm	1 HP, 2-Speed Electric Motor, 115 V, 60 Hz, 15 amp	Robo-Arm® (18" of Automated Vertical Stroke) RoboRoller™ Leverless Bead Lifter	Vertical 5.4 Gallons in Tower

GTS-50

GTS-60

GTS-70

GTS-90

TYPE	MODEL	RIM DIAMETER	MAX TYRE DIAMETER	MAX RIM WIDTH	WHEEL CLAMPING SYSTEM	ELECTRIC DRIVE SYSTEM	HELPER DEVICES	BEAD SEATING AIR VOLUM
Tyre Changer	GTS-50	6" - 24" External	38" Max	15" Max	4 Clamps, Air Cylinder Operated	1 HP, 2-Speed Electric Motor, 115 V, 60 Hz, 15 amp	Optional	NA
Tyre Changer	GTS-60	6" - 24" External	38" Max	15" Max	4 Clamps, Air Cylinder Operated	1 HP, 2-Speed Electric Motor, 115 V, 60 Hz, 15 amp	Power Roller Disc	Vertical 3.8 Gallons in Tower
Tyre Changer	GTS-70	6" - 24" External	38" Max	14" Max	4 Clamps, Air Cylinder Operated	1 HP, 2-Speed Electric Motor, 115 V, 60 Hz, 15 amp	Robo-Assist Powered Roller Disk	Vertical 3.8 Gallons in Tower
Tyre Changer	GTS-90	6" - 24" External	38" Max	15" Max	4 Clamps, Air Cylinder Operated	1 HP, 2-Speed Electric Motor, 115 V, 60 Hz, 15 amp	Robo-Arm® Powered Roller Disc RoboRoller®	Vertical 3.8 Gallons in Tower

RC-45

RC-55

TYPE	MODEL	RIM DIAMETER	MAX TYRE DIAMETER	MAX RIM WIDTH	WHEEL CLAMPING SYSTEM	AIR DRIVEN SYSTEM	ELECTRIC DRIVE SYSTEM	HELPER DEVICES	BEAD SEATING AIR VOLUM
Tyre Changer	RC-45	6" - 24" External	50" Max	10.5" Max	4 Clamps, Air Cylinder Operated	1.5 HP Air Motor, 110 - 175 psi, 15 scfm	1 HP Electric Motor, 115 V, 60 Hz, 15 amp	NA	3.4 Gallons in Tower
Tyre Changer	RC-55	6" - 24" External	50" Max	10.5" Max	4 Clamps, Air Cylinder Operated	1.5 HP Air Motor, 110 - 175 psi, 15 scfm	1 HP Electric Motor, 115 V, 60 Hz, 15 amp	RC Robo-Arm®	3.4 Gallons in Tower

S521

S524

TBE 60 TERRA

S421

AS922

S256

TYPE	MODEL	OUTSIDE CLAMP	INSIDE CLAMP	WORKING AIR PRESSURE	MOTOR POWER
Tyre Changer	S521	10"- 21"	12"- 24"	8 - 10 bar	0.85 kW - 1.1 kW
Tyre Changer	S524	11"- 24"	13"- 26"	8 - 10 bar	0.85 kW - 1.1 kW
Tyre Changer	S421	10" - 21"	12" - 24"	8 - 10 bar	0.75 kW -1.1 kW
Tyre Changer	AS922	10" - 22"	13" - 25"	8 - 10 bar	0.9 kW -1.2 kW

MODEL	MAX TYRE WIDTH	MAX TYRE DIAMETER	CLAMPING CAPACITY	HYDRAULIC CONTROL UNIT MOTOR
TBE 60 Terra	1800 mm (71")	3000 mm (118")	14" - 50" 60" by using extensions	4.8 kW (3ph)
S256	1100 mm (43")	2300 mm (90.5")	14" - 40" 56" with adaptor	1.5 kW (oil) 2.4 - 3.2 kW (gearbox)

WHEEL BALANCER

1300

1400

1500

1600

TYPE	MODEL	WHEEL DIAMETER RANGE	MAX TYRE DIAMETER	INTERFACE	ELECTRICAL REQUIREMENT	MAX TYRE WEIGHT	SHIP WEIGHT
Wheel Balancer	1300	8" - 30"	Up to 44"	LED	220v, 1ph or 220v, 3ph	150 lbs.	639 lbs.
Wheel Balancer	1400	8" - 30"	Up to 44"	LED	220v, 1ph or 220v, 3ph	160 lbs.	616 lbs.
Wheel Balancer	1500	8" - 30"	Up to 44"	LED	220v, 1ph or 220v, 3ph	160 lbs.	616 lbs.
Wheel Balancer	1600	8" - 30"	Up to 44"	Touchscreen	220v, 1ph or 220v, 3ph	160 lbs.	650 lbs.

MT 3200

MT 3650

MT 3900

MT 4000

TYPE	MODEL	BALANCING SPEED	WHEEL DIAMETER RANGE	MAX WHEEL DIAMETER	MAX WHEEL WIDTH	SUPPLY VOLTAGE
Wheel Balancer	MT3200	90 - 130 rpm	10" - 28"	1117 mm.	600 mm.	115 - 230 V 1 ph, 50/60 Hz
Wheel Balancer	MT3650	90 - 130 rpm	10" - 28"	1117 mm.	600 mm.	115 - 230 V 1 ph, 50/60 Hz
Wheel Balancer	MT3900	75/85/ 98 rpm	10" - 28"	1117 mm.	560 mm.	115 - 230 V 1 ph, 50/60 Hz
Wheel Balancer	MT4000	75/85/ 98 rpm	10" - 28"	1118 mm.	600 mm.	115 - 230 V 1 ph, 50/60 Hz

MT2450

MT2650

TYPE	MODEL	READOUT ACCURACY (CAR-TRUCK)	RIM DIAMETER	RIM WIDTH	MAXIMUM WHEEL DIAMETER	MAX. WHEEL WEIGHT
Wheel Balancer	MT2450	1gr-1/10oz	7"-30" car 12"-30" truck	1,5"-22" car 4"-22" truck	1220 mm	65 KG car 300 KG Truck
Wheel Balancer	MT2650	1 gr.	7" - 30" car 12" - 30" truck	1.5" - 22" car 4" - 22" truck	1220 mm	65 kg. car 200 kg. truck

COMPUTERISED WHEEL ALIGNMENT

TRIGON 4 VISION

TRIGON NOVO

TYPE	MODEL	TOTAL TOE	CAMBER	CASTER	KING PIN	STEERING DIFFERENCE AT 20°	POWER SUPPLY
Wheel Aligners	TRIGON 4 Vision	± 20°	± 10°	± 30°	± 30°	± 10°	115/230V-1 Ph- 50/60Hz
Wheel Aligners	TRIGON NOVO	± 20°	± 10°	± 30°	± 30°	± 20°	115-230 Vac 50-60 Hz 1ph

725

728

TYPE	MODEL	TOTAL FRONT AND REAR TOE	HALF TOE	CAMBER	KING PIN	POWER SUPPLY
Wheel Aligners	725 (Pro Truck)	± 48°	± 24°	± 10°	± 30°	90/260V AC (50-60Hz) 1ph
	725 (Pro)	± 48°	± 24°	±30°	± 30°	115/230V-1ph-50/60Hz

TYPE	MODEL	FRONT STEERING ANGLE	FRONT AND REAR INCLINATION	CAMBER AND KING PIN	FRONT AND REAR SET BACK	POWER SUPPLY
Wheel Aligners	728 (Platinum S)	± 60°	± 10°	± 30°	± 24°	115-230 Vac 50-60 Hz 1ph

LIFTING EQUIPMENT

TITAN

TYPE	MODEL	MAX CAPACITY	LIFTING TIME	PNEUMATIC POWER SUPPLY	MOTOR POWER	POWER SUPPLY
Lifting Equipment	X571LT X573LT X463LT	3500 kg.	8"	4-10 bar	3 kW	230/400V 3ph - 50Hz
	X571 X573 X461 X463	5000 kg./ 4300kg.	95"	4-10 bar	3 kW	230/400V 3ph - 50Hz

TYPE	MODEL	RAISING TIME	LOWERING TIME	PNEUMATIC POWER SUPPLY	MAX LIFTING HIGHT	MOTOR POWER	POWER SUPPLY
Lifting Equipment	TITAN X 3000	40 s	40 s	4-10 bar (Version S)	1900 (version I) - 2000 mm.	3 kW	230-400V 3ph 50-60Hz, 230V 1ph 50Hz
Lifting Equipment	TITAN X 3500	40 s	40 s	4-10 bar (Version S)	1900 (version I) - 2000 mm.	3 kW	230-400V 3ph 50-60Hz, 230V 1ph 50Hz
Lifting Equipment	TITAN X 4000	40 s	40 s	4-10 bar (Version S)	1900 (version I) - 2000 mm.	3 kW	230-400V 3ph 50-60Hz, 230V 1ph 50Hz
Lifting Equipment	TITAN X2040T	40 s	40 s	-	1900 mm.	3 kW	230-400V 3ph 50-60Hz 230V 1ph 50Hz

MAGNUM

TYPE	MODEL	MAX CAPACITY	POWER SUPPLY	MOTOR POWER	POWER SUPPLY
Lifting Equipment	10/5.8	10 t	6 - 8 bar	5.5 kW	400V 3ph 50Hz
Lifting Equipment	20/7.5*	20 t	6 - 8 bar	5.5 kW	400V 3ph 50Hz
Lifting Equipment	20/10*	20 t	6 - 8 bar	5.5 kW	400V 3ph 50Hz
Lifting Equipment	30/11.25*	30 t	6 - 8 bar	7.5 kW	400V 3ph 50Hz
Lifting Equipment	30/13.75	30 t	6 - 8 bar	7.5 kW	400V 3ph 50Hz
Lifting Equipment	40/15	40 t	6 - 8 bar	7.5 kW	400V 3ph 50Hz
Lifting Equipment	50/18.75	40 t	6 - 8 bar	9.2 kW	400V 3ph 50Hz
Lifting Equipment	10/5.8 LT	10 t	6 - 8 bar	5.5 kW & 3 kW LT	400V 3ph 50Hz
Lifting Equipment	20/7.5 LT*	20 t	6 - 8 bar	5.5 kW & 3 kW LT	400V 3ph 50Hz
Lifting Equipment	20/10 LT*	20 t	6 - 8 bar	5.5 kW & 3 kW LT	400V 3ph 50Hz
Lifting Equipment	30/11.25 LT*	30 t	6 - 8 bar	7.5 kW & 3 kW LT	400V 3ph 50Hz
Lifting Equipment	30/13.75 LT	30 t	6 - 8 bar	7.5 kW & 3 kW LT	400V 3ph 50Hz
Lifting Equipment	40/15 LT	40 t	6 - 8 bar	7.5 kW & 3 kW LT	400V 3ph 50Hz
Lifting Equipment	50/18.75 LT	50 t	6 - 8 bar	9.2 kW & 3 kW LT	400V 3ph 50Hz

*also available in a DOUBLE LIFT version

TYPE	MODEL		LIFTING/ LOWERING TIME	PNEUMATIC POWER SUPPLY	MAX HIGHT	POWER SUPPLY	MOTOR POWER
Lifting Equipment	TITAN PI 240N	V	49 s / 55 s	6 - 8 bar	3870 mm.	230-400V 3ph 50-60Hz, 230V 1ph 50Hz	2,6 kW (400V 3ph 50Hz)
Lifting Equipment		VX	49 s / 55 s	6 - 8 bar	4470 mm.	230-400V 3ph 50-60Hz, 230V 1ph 50Hz	2,6 kW (400V 3ph 50Hz)
Lifting Equipment		VXL	49 s / 55 s	6 - 8 bar	5070 mm.	230-400V 3ph 50-60Hz, 230V 1ph 50Hz	2,6 kW (400V 3ph 50Hz)
Lifting Equipment	TITAN PI 240E	V	49 s / 55 s	-	3870 mm.	230-400V 3ph 50-60Hz, 230V 1ph 50Hz	2,6 kW (400V 3ph 50Hz)
Lifting Equipment		VX	49 s / 55 s	-	4470 mm.	230-400V 3ph 50-60Hz, 230V 1ph 50Hz	2,6 kW (400V 3ph 50Hz)
Lifting Equipment		VXL	49 s / 55 s	-	5070 mm.	230-400V 3ph 50-60Hz, 230V 1ph 50Hz	2,6 kW (400V 3ph 50Hz)

* Max Capacity 4000 kg.

TITAN PI 441 B

TYPE	MODEL	LIFTING TIME	LOWERING TIME	POWER SUPPLY	MOTOR POWER
Lifting Equipment	TITAN PI 441 B	34 s	33 s	230-400V 3ph 50-60Hz, 230V 1ph 50Hz	2,6 kW (400V 3ph 50Hz)

RECIPROCATING AIR COMPRESSORS

TANK MOUNTED

BASE MOUNTED

TYPE	MODEL	POWER	WORKING PRESSURE	CAPACITY	TYPE OF MOUNTING
Air Compressor	TS 20 LB	20 HP / 15.0 KW	7 kg/cm2 or 99.56 psi	125.56 m3/hr , 73.90 cfm	Tank/base
Air Compressor	TS 20 LB	20 HP / 15.0 KW	10 kg/cm2 or 142.23 psi	116.94 m3/hr , 68.83 cfm	Tank/base
Air Compressor	TS 20 LB	20 HP / 15.0 KW	12 kg/cm2 or 170.68 psi	109.79 m3/hr , 64.62 cfm	Tank/base
Air Compressor	TS 25 LB	25 HP / 18.5 KW	7 kg/cm2 or 99.56 psi	138.23 m3/hr , 81.36 cfm	Base
Air Compressor	TS 25 LB	25 HP / 18.5 KW	10 kg/cm2 or 142.23 psi	126.90 m3/hr , 74.69 cfm	Base
Air Compressor	TS 25 LB	25 HP / 18.5 KW	12 kg/cm2 or 170.68 psi	121.38 m3/hr , 71.44 cfm	Base
Air Compressor	TS 30 LB	30 HP / 22.0 KW	7 kg/cm2 or 99.56 psi	177.17 m3/hr , 104.28 cfm	Base
Air Compressor	TS 30 LB	30 HP / 22.0 KW	10 kg/cm2 or 142.23 psi	160.84 m3/hr , 94.67 cfm	Base
Air Compressor	TS 30 LB	30 HP / 22.0 KW	12 kg/cm2 or 170.68 psi	151.98 m3/hr , 89.45 cfm	Base
Air Compressor	TS 40 LB	40 HP / 30.0 KW	7 kg/cm2 or 99.56 psi	217.25 m3/hr , 127.87 cfm	Base
Air Compressor	TS 40 LB	40 HP / 30.0 KW	10 kg/cm2 or 142.23 psi	204.47 m3/hr , 120.35 cfm	Base
Air Compressor	TS 40 LB	40 HP / 30.0 KW	12 kg/cm2 or 170.68 psi	178.73 m3/hr , 105.20 cfm	Base

SS 03 LB-SS 15 LB

TS 03 LB-TS 15 LB*

TYPE	MODEL	MOTOR POWER	FREE AIR DELIVERY	MAX PRESSURE	COMPRESSOR SPEED	AIR RECIEVER	NET WEIGHT
Air Compressor	SS 03 LB	3.0 HP / 2.2 KW	255 lpm / 9.0 cfm	9 kg/cm2 or 128 psi	550 rpm	160 Litres	205 kg
Air Compressor	SS 05 LB	5.0 HP / 3.7 KW	442 lpm / 15.6 cfm	9 kg/cm2 or 128 psi	925 rpm	220 Litres	265 kg
Air Compressor	SS 07 LB	7.5 HP / 5.5 KW	708 lpm / 25.0 cfm	9 kg/cm2 or 128 psi	690 rpm	220 Litres	307 kg
Air Compressor	SS 10 LB	10.0 HP / 7.5 KW	949 lpm / 33.5 cfm	9 kg/cm2 or 128 psi	920 rpm	220 Litres	322 kg
Air Compressor	SS 10 LB	10.0 HP / 7.5 KW	949 lpm / 33.5 cfm	9 kg/cm2 or 128 psi	920 rpm	420 Litres	367 kg
Air Compressor	SS 15 LB	15.0 HP / 11.0 KW	1390 lpm / 49.1 cfm	9 kg/cm2 or 128 psi	925 rpm	500 Litres	514 kg

TYPE	MODEL	MOTOR POWER	FREE AIR DELIVERY	MAX PRESSURE	COMPRESSOR SPEED	AIR RECIEVER	NET WEIGHT
Air Compressor	TS 03 LB	3.0 HP / 2.2 KW	249 lpm / 8.8 cfm	12 kg/cm2 or 175 psi	925 rpm	160 Litres	200 kg
Air Compressor	TS 03 LB	3.0 HP / 2.2 KW	249 lpm / 8.8 cfm	12 kg/cm2 or 175 psi	925 rpm	220 Litres	225 kg
Air Compressor	TS 05 LB	5.0 HP / 3.7 KW	411 lpm / 14.5 cfm	12 kg/cm2 or 175 psi	925 rpm	220 Litres	240 kg
Air Compressor	TS 07 LB	7.5 HP / 5.5 KW	583 lpm / 20.6 cfm	12 kg/cm2 or 175 psi	1050 rpm	220 Litres	270 kg
Air Compressor	TS 10 LB*	10.0 HP / 7.5 KW	852 lpm / 30.1 cfm	12 kg/cm2 or 175 psi	750 rpm	220 Litres	350 kg
Air Compressor	TS 10 LB*	10.0 HP / 7.5 KW	852 lpm / 30.1 cfm	12 kg/cm2 or 175 psi	750 rpm	420 Litres	410 kg
Air Compressor	TS 10 LB*	10.0 HP / 7.5 KW	852 lpm / 30.1 cfm	12 kg/cm2 or 175 psi	750 rpm	500 Litres	420 kg
Air Compressor	TS 15 LB*	15.0 HP / 11.0 KW	1249 lpm / 44.1 cfm	12 kg/cm2 or 175 psi	1150 rpm	500 Litres	470 kg

* Available in base mounted versions also

AIR DRYER

EG 11-EG 75

TYPE	MODEL	MOTOR POWER	WORKING PRESSURE	MAX PRESSURE	FREE AIR DELIVERY	WEIGHT (KG) WITHOUT DRYER	WEIGHT (KG) WITH DRYER	NOISE LEVEL
Air Dryer	EG 11	11 kW / 15 HP	7 bar or 102 psi	7.5 bar or 109 psi	2.01 m3/min , 71 cfm	532	590	69 dB(A)
Air Dryer	EG 11	11 kW / 15 HP	8 bar or 116 psi	8.5 bar or 123 psi	1.81 m3/min , 64 cfm	532	590	69 dB(A)
Air Dryer	EG 11	11 kW / 15 HP	9.5 bar or 138 psi	10 bar or 145 psi	1.64 m3/min , 58 cfm	532	590	69 dB(A)
Air Dryer	EG 11	11 kW / 15 HP	12.5 bar or 181 psi	13 bar or 189 psi	1.39 m3/min , 49 cfm	532	590	69 dB(A)
Air Dryer	EG 15	15 kW / 20 HP	7 bar or 102 psi	7.5 bar or 109 psi	2.78 m3/min , 98 cfm	552	630	69 dB(A)
Air Dryer	EG 15	15 kW / 20 HP	8 bar or 116 psi	8.5 bar or 123 psi	2.63 m3/min , 93 cfm	552	630	69 dB(A)
Air Dryer	EG 15	15 kW / 20 HP	9.5 bar or 138 psi	10 bar or 145 psi	2.27 m3/min , 80 cfm	552	630	69 dB(A)
Air Dryer	EG 15	15 kW / 20 HP	12.5 bar or 181 psi	13 bar or 189 psi	1.98 m3/min , 70 cfm	552	630	69 dB(A)
Air Dryer	EG 18	18 kW / 25 HP	7 bar or 102 psi	7.5 bar or 109 psi	3.40 m3/min , 120 cfm	650	720	69 dB(A)
Air Dryer	EG 18	18 kW / 25 HP	8 bar or 116 psi	8.5 bar or 123 psi	3.23 m3/min , 114 cfm	650	720	69 dB(A)
Air Dryer	EG 18	18 kW / 25 HP	9.5 bar or 138 psi	10 bar or 145 psi	2.83 m3/min , 100 cfm	650	720	69 dB(A)
Air Dryer	EG 18	18 kW / 25 HP	12.5 bar or 181 psi	13 bar or 189 psi	2.32 m3/min , 82 cfm	650	720	69 dB(A)
Air Dryer	EG 22	22 kW / 30 HP	7 bar or 102 psi	7.5 bar or 109 psi	4.02 m3/min , 142 cfm	660	720	69 dB(A)
Air Dryer	EG 22	22 kW / 30 HP	8 bar or 116 psi	8.5 bar or 123 psi	3.91 m3/min , 138 cfm	660	720	69 dB(A)
Air Dryer	EG 22	22 kW / 30 HP	9.5 bar or 138 psi	10 bar or 145 psi	3.34 m3/min , 118 cfm	660	720	69 dB(A)
Air Dryer	EG 22	22 kW / 30 HP	12.5 bar or 181 psi	13 bar or 189 psi	2.75 m3/min , 97 cfm	660	720	69 dB(A)
Air Dryer	EG 26	26 kW / 35 HP	4.5 bar or 65 psi	5 bar or 73 psi	5.15 m3/min , 182 cfm	1044	1179	69 dB(A)
Air Dryer	EG 26	26 kW / 35 HP	7 bar or 102 psi	7.5 bar or 109 psi	5.01 m3/min , 177 cfm	1044	1179	69 dB(A)
Air Dryer	EG 26	26 kW / 35 HP	8 bar or 116 psi	8.5 bar or 123 psi	4.47 m3/min , 158 cfm	1044	1179	69 dB(A)
Air Dryer	EG 26	26 kW / 35 HP	9.5 bar or 138 psi	10 bar or 145 psi	4.16 m3/min , 147 cfm	1044	1179	69 dB(A)
Air Dryer	EG 26	26 kW / 35 HP	12.5 bar or 181 psi	13 bar or 189 psi	3.43 m3/min , 121 cfm	1044	1179	69 dB(A)
Air Dryer	EG 30	30 kW / 40 HP	4.5 bar or 65 psi	5 bar or 73 psi	5.95 m3/min , 210 cfm	1044	1179	69 dB(A)
Air Dryer	EG 30	30 kW / 40 HP	7 bar or 102 psi	7.5 bar or 109 psi	5.83 m3/min , 206 cfm	1044	1179	69 dB(A)
Air Dryer	EG 30	30 kW / 40 HP	8 bar or 116 psi	8.5 bar or 123 psi	5.18 m3/min , 183 cfm	1044	1179	69 dB(A)
Air Dryer	EG 30	30 kW / 40 HP	9.5 bar or 138 psi	10 bar or 145 psi	4.87 m3/min , 172 cfm	1044	1179	69 dB(A)
Air Dryer	EG 30	30 kW / 40 HP	12.5 bar or 181 psi	13 bar or 189 psi	4.05 m3/min , 143 cfm	1044	1179	69 dB(A)
Air Dryer	EG 37	37 kW / 50 HP	4.5 bar or 65 psi	5 bar or 73 psi	7.28 m3/min , 257 cfm	1110	1260	69 dB(A)
Air Dryer	EG 37	37 kW / 50 HP	7 bar or 102 psi	7.5 bar or 109 psi	7.22 m3/min , 255 cfm	1110	1260	69 dB(A)
Air Dryer	EG 37	37 kW / 50 HP	8 bar or 116 psi	8.5 bar or 123 psi	6.65 m3/min , 235 cfm	1110	1260	69 dB(A)
Air Dryer	EG 37	37 kW / 50 HP	9.5 bar or 138 psi	10 bar or 145 psi	5.97 m3/min , 211 cfm	1110	1260	69 dB(A)
Air Dryer	EG 37	37 kW / 50 HP	12.5 bar or 181 psi	13 bar or 189 psi	5.24 m3/min , 185 cfm	1110	1260	69 dB(A)
Air Dryer	EG 45	45 kW / 60 HP	4.5 bar or 65 psi	5 bar or 73 psi	8.86 m3/min , 313 cfm	1116	1266	69 dB(A)
Air Dryer	EG 45	45 kW / 60 HP	7 bar or 102 psi	7.5 bar or 109 psi	8.75 m3/min , 309 cfm	1116	1266	69 dB(A)
Air Dryer	EG 45	45 kW / 60 HP	8 bar or 116 psi	8.5 bar or 123 psi	7.99 m3/min , 282 cfm	1116	1266	69 dB(A)
Air Dryer	EG 45	45 kW / 60 HP	9.5 bar or 138 psi	10 bar or 145 psi	7.39 m3/min , 261 cfm	1116	1266	69 dB(A)
Air Dryer	EG 45	45 kW / 60 HP	12.5 bar or 181 psi	13 bar or 189 psi	6.23 m3/min , 220 cfm	1116	1266	69 dB(A)
Air Dryer	EG 55	55 kW / 75 HP	4.5 bar or 65 psi	5.5 bar or 80 psi	10.90 m3/min , 385 cfm	1523	1698	69 dB(A)
Air Dryer	EG 55	55 kW / 75 HP	7 bar or 102 psi	8 bar or 116 psi	10.76 m3/min , 380 cfm	1523	1698	69 dB(A)
Air Dryer	EG 55	55 kW / 75 HP	8 bar or 116 psi	9 bar or 131 psi	10.11 m3/min , 357 cfm	1523	1698	69 dB(A)
Air Dryer	EG 55	55 kW / 75 HP	9.5 bar or 138 psi	10.5 bar or 152 psi	9.29 m3/min , 328 cfm	1523	1698	69 dB(A)
Air Dryer	EG 55	55 kW / 75 HP	12.5 bar or 181 psi	13.5 bar or 196 psi	7.59 m3/min , 268 cfm	1523	1698	69 dB(A)
Air Dryer	EG 75	75 kW / 100 HP	7 bar or 102 psi	8 bar or 116 psi	14.78 m3/min , 522 cfm	2020	2240	69 dB(A)
Air Dryer	EG 75	75 kW / 100 HP	8 bar or 116 psi	9 bar or 131 psi	13.88 m3/min , 490 cfm	2020	2240	69 dB(A)
Air Dryer	EG 75	75 kW / 100 HP	9.5 bar or 138 psi	10.5 bar or 152 psi	12.74 m3/min , 450 cfm	2020	2240	69 dB(A)
Air Dryer	EG 75	75 kW / 100 HP	12.5 bar or 181 psi	13.5 bar or 196 psi	11.04 m3/min , 390 cfm	2020	2240	69 dB(A)

EN 2-EN 45

TYPE	MODEL	MOTOR POWER	WORKING PRESSURE	MAX PRESSURE	FREE AIR DELIVERY	WEIGHT	NOISE LEVEL
Air Dryer	EN 2	2.2 kW / 3.0 HP	7 bar / 102 psi	7.2 bar / 104 psi	0.32 m3/min , 11.2 cfm	133 kg	61 dB(A)
Air Dryer	EN 2	2.2 kW / 3.0 HP	9.5 bar / 138 psi	9.7 bar / 141 psi	0.25 m3/min , 8.7 cfm	133 kg	61 dB(A)
Air Dryer	EN 3	3.0 kW / 4.0 HP	7 bar / 102 psi	7.2 bar / 104 psi	0.43 m3/min , 15.3 cfm	133 kg	61 dB(A)
Air Dryer	EN 3	3.0 kW / 4.0 HP	9.5 bar / 138 psi	9.7 bar / 141 psi	0.36 m3/min , 12.7 cfm	133 kg	61 dB(A)
Air Dryer	EN 3	3.0 kW / 4.0 HP	12.5 bar / 181 psi	12.7 bar / 184 psi	0.25 m3/min , 9.0 cfm	133 kg	61 dB(A)
Air Dryer	EN 4	4.0 kW / 5.0 HP	7 bar / 102 psi	7.2 bar / 104 psi	0.54 m3/min , 19.0 cfm	143 kg	64 dB(A)
Air Dryer	EN 4	4.0 kW / 5.0 HP	9.5 bar / 138 psi	9.7 bar / 141 psi	0.48 m3/min , 16.9 cfm	143 kg	64 dB(A)
Air Dryer	EN 4	4.0 kW / 5.0 HP	12.5 bar / 181 psi	12.7 bar / 184 psi	0.40 m3/min , 14.2 cfm	143 kg	64 dB(A)
Air Dryer	EN 5	5.5 kW / 7.5 HP	7 bar / 102 psi	7.2 bar / 104 psi	0.74 m3/min , 26.0 cfm	150 kg	64 dB(A)
Air Dryer	EN 5	5.5 kW / 7.5 HP	9.5 bar / 138 psi	9.7 bar / 141 psi	0.64 m3/min , 22.4 cfm	150 kg	64 dB(A)
Air Dryer	EN 5	5.5 kW / 7.5 HP	12.5 bar / 181 psi	12.7 bar / 184 psi	0.53 m3/min , 18.6 cfm	150 kg	64 dB(A)
Air Dryer	EN 5x	5.5 kW / 7.5 HP	7 bar / 102 psi	7.2 bar / 104 psi	0.84 m3/min , 29.5 cfm	235 kg	66 dB(A)
Air Dryer	EN 5x	5.5 kW / 7.5 HP	9.5 bar / 138 psi	9.7 bar / 141 psi	0.68 m3/min , 24.0 cfm	235 kg	66 dB(A)
Air Dryer	EN 5x	5.5 kW / 7.5 HP	12.5 bar / 181 psi	12.7 bar / 184 psi	0.54 m3/min , 19.2 cfm	235 kg	66 dB(A)
Air Dryer	EN 7	7.5 kW / 10.0 HP	7 bar / 102 psi	7.2 bar / 104 psi	1.13 m3/min , 40.0 cfm	260 kg	66 dB(A)
Air Dryer	EN 7	7.5 kW / 10.0 HP	9.5 bar / 138 psi	9.7 bar / 141 psi	0.93 m3/min , 33.0 cfm	260 kg	66 dB(A)
Air Dryer	EN 7	7.5 kW / 10.0 HP	12.5 bar / 181 psi	12.7 bar / 184 psi	0.76 m3/min , 27.0 cfm	260 kg	66 dB(A)
Air Dryer	EN 11	11.0 kW / 15.0 HP	7 bar / 102 psi	7.2 bar / 104 psi	1.76 m3/min , 62.0 cfm	280 kg	71 dB(A)
Air Dryer	EN 11	11.0 kW / 15.0 HP	9.5 bar / 138 psi	9.7 bar / 141 psi	1.47 m3/min , 52.0 cfm	280 kg	71 dB(A)
Air Dryer	EN 11	11.0 kW / 15.0 HP	12.5 bar / 181 psi	12.7 bar / 184 psi	1.23 m3/min , 43.6 cfm	280 kg	71 dB(A)
Air Dryer	EN 15	15.0 kW / 20.0 HP	7 bar / 102 psi	7.2 bar / 104 psi	2.04 m3/min , 72.0 cfm	310 kg	71 dB(A)
Air Dryer	EN 15	15.0 kW / 20.0 HP	9.5 bar / 138 psi	9.7 bar / 141 psi	1.78 m3/min , 63.0 cfm	310 kg	71 dB(A)
Air Dryer	EN 15	15.0 kW / 20.0 HP	12.5 bar / 181 psi	12.7 bar / 184 psi	1.57 m3/min , 55.5 cfm	310 kg	71 dB(A)
Air Dryer	EN 15x	15 kW / 20 HP	7 bar / 102 psi	7.2 bar / 104 psi	2.48 m3/min , 88 cfm	520 kg	69 dB(A)
Air Dryer	EN 15x	15 kW / 20 HP	9.5 bar / 138 psi	9.7 bar / 141 psi	2.12 m3/min , 75 cfm	520 kg	69 dB(A)
Air Dryer	EN 15x	15 kW / 20 HP	12.5 bar / 181 psi	12.7 bar / 184 psi	1.81 m3/min , 64 cfm	520 kg	69 dB(A)
Air Dryer	EN 18	18.5 kW / 25 HP	7 bar / 102 psi	7.2 bar / 104 psi	3.11 m3/min , 110 cfm	558 kg	69 dB(A)
Air Dryer	EN 18	18.5 kW / 25 HP	9.5 bar / 138 psi	9.7 bar / 141 psi	2.63 m3/min , 93 cfm	558 kg	69 dB(A)
Air Dryer	EN 18	18.5 kW / 25 HP	12.5 bar / 181 psi	12.7 bar / 184 psi	2.15 m3/min , 76 cfm	558 kg	69 dB(A)
Air Dryer	EN 22	22 kW / 30 HP	7 bar / 102 psi	7.2 bar / 104 psi	3.54 m3/min , 125 cfm	610 kg	69 dB(A)
Air Dryer	EN 22	22 kW / 30 HP	9.5 bar / 138 psi	9.7 bar / 141 psi	3.06 m3/min , 108 cfm	610 kg	69 dB(A)
Air Dryer	EN 22	22 kW / 30 HP	12.5 bar / 181 psi	12.7 bar / 184 psi	2.60 m3/min , 92 cfm	610 kg	69 dB(A)
Air Dryer	EN 30	30 kW / 40 HP	7 bar / 102 psi	7.2 bar / 104 psi	4.30 m3/min , 152 cfm	678 kg	69 dB(A)
Air Dryer	EN 30	30 kW / 40 HP	9.5 bar / 138 psi	9.7 bar / 141 psi	3.60 m3/min , 127 cfm	678 kg	69 dB(A)
Air Dryer	EN 30	30 kW / 40 HP	12.5 bar / 181 psi	12.7 bar / 184 psi	3.00 m3/min , 106 cfm	678 kg	69 dB(A)
Air Dryer	EN 30x	30 kW / 40 HP	7 bar / 102 psi	7.5 bar / 109 psi	5.41 m3/min , 191 cfm	850 kg	74 dB(A)
Air Dryer	EN 30x	30 kW / 40 HP	9.5 bar / 138 psi	10.0 bar / 145 psi	4.39 m3/min , 155 cfm	850 kg	74 dB(A)
Air Dryer	EN 30x	30 kW / 40 HP	12.5 bar / 181 psi	13.0 bar / 189 psi	3.60 m3/min , 127 cfm	850 kg	74 dB(A)
Air Dryer	EN 37	37 kW / 50 HP	7 bar / 102 psi	7.5 bar / 109 psi	6.57 m3/min , 232 cfm	890 kg	74 dB(A)
Air Dryer	EN 37	37 kW / 50 HP	9.5 bar / 138 psi	10.0 bar / 145 psi	5.47 m3/min , 193 cfm	890 kg	74 dB(A)
Air Dryer	EN 37	37 kW / 50 HP	12.5 bar / 181 psi	13.0 bar / 189 psi	4.70 m3/min , 166 cfm	890 kg	74 dB(A)
Air Dryer	EN 45	45 kW / 60 HP	7 bar / 102 psi	7.5 bar / 109 psi	7.93 m3/min , 280 cfm	950 kg	77 dB(A)
Air Dryer	EN 45	45 kW / 60 HP	9.5 bar / 138 psi	10.0 bar / 145 psi	6.80 m3/min , 240 cfm	950 kg	77 dB(A)
Air Dryer	EN 45	45 kW / 60 HP	12.5 bar / 181 psi	13.0 bar / 189 psi	5.66 m3/min , 200 cfm	950 kg	77 dB(A)

WHEELED CHARGERS

6023

6027B

6512

6127XL

TYPE	MODEL	CONTINUOUS AMPERAGE CHARGING RATE	CRANK ASSIST	DC LEADS	CLAMP RATING	WEIGHT (POUNDS) LBS	BATTERY TYPE
Wheeled charger	6023	60/50/25 Amp	300A	8' 4AWG	400 Amp	50 Lbs	6/12/24 Volt
Wheeled charger	6027 B	90/75/55 Amp	500A	8' 4AWG	500 Amp	75 Lbs	6/12/24 Volt
Wheeled charger	6512/6512G	100/80/30 Amp	500A	6' 7" 4 AWG	400 Amp	49 Lbs	6/12/24 Volt
Wheeled charger	6127XL	-	Up to 1100A	8' 4AWG	500 Amp	54 Lbs	12 Volt

BATTERY AND ELECTRICAL SYSTEM TESTERS

TYPE	MODEL	VOLT METER	BATTERY CCA TEST RANGE	LEADS	CLAMPS
Battery Tester	12-1015	9-15 Volts DC	100 – 1700 CCA	6 FT	Kelvin Connection

FOUR POST RUNWAY FORKLIFT SERVICE LIFT

TYPE	LIFTING CAPACITY	LIFTING HEIGHT	LIFTING/ LOWERING SPEED	TRACK DIMENSIONS	RAMP DIMENSIONS	LIFT DIMENSIONS	MOTOR
Forklift Lift	12.5 tons (25,000 lbs.) minimum	69 1/4 inches (minimum)	30 inches per minute	Length: 178 inches Width: 24 inches	Width: 24 inches Height: 9 1/4 inches	Width: 150 1/4 inches Length: 243 1/4 inches	208-230 VAC, 1 phase, 60 Hz

TYRE SENSOR

Technology has revolutionized our world, created amazing tools and placed useful information at our fingertips. tSm™ was developed by UMWS Automotive Garage Solution for this reason. This is a smart tech that helps monitor tire pressure while integrating with our digital lifestyle. The Real-Time Data on our tSm™ Mobile Application gives you confidence on the road.

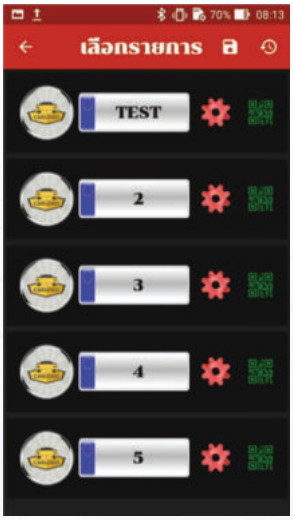

PORTABLE INFLATOR

tSm™ portable inflators is lightweight and easy carry. The multipurpose inflation nozzle supports all your inflation needs be it vehicle tires, sports equipment or children toys.

SIZE	PRESSURE	AIR FLOW	POWER	N.W	CHARGE TIME
54.8*44.8*240mm	150 PSI	9-15 Volts DC	12V / 5A / 60W / 2000 mAh	360 g.	At least 4 hours charging for first time, next time should be charged 2 hours.

MORE ENQUIRIES,
PLEASE CONTACT US AT

HYDRAULIC TOOLS & MACHINES

HYDROLUTION TECHNOLOGIES PTE LTD

HYDROLUTION builds high and low pressure of Hydraulics Cylinders, tools and equipment with CE Certified that is used in wide range of heavy industrial markets and application. Range of products are very diverse and can be divided into several categories to meet different market demand that make us different from others. Our high-quality products meet your high-pressure application with reasonable and competitive prices to meet the current market demand and help customer to get their return of investment fast

HYDRAULIC CYLINDERS

ALUMINUM CYLINDERS MODEL : ACHC SERIES

Capacity: 20 - 60 Tons
Stroke: 50 - 150 mm
Spring Return, Hollow Type
Max. Working Pressure: 700 bar / 10,000 psi

FEATURES

- Half weight of the steel cylinders.
- Heavy duty spring for fast & full retraction.
- Chrome plated center hole for extra protection.
- Carrying handles are equipped with all models.
- Hard-Anodized coating reduces wear & corrosion.
- Stop rings for piston blow-out protection.
- Rod wiper protects inner rod from dirt.

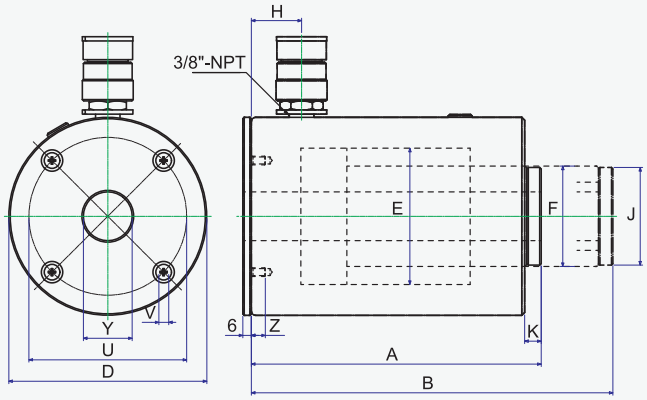

BASE PLATE MOUNTING HOLES DIMENSIONS(MM)			
MODEL NO./ CAPACITY (TON)	BOLT CIRCLE U (MM)	THREAD V (MM)	THREAD DEPTH Z (MM)
ACHC-20	80	M6x1.0	10
ACHC-30	110	M6x1.0	10
ACHC-60	160	M6x1.0	10

SPECIFICATIONS

MODEL NO./ CAPACITY	CYLINDER CAPACITY (TON)	STROKE (MM)	CYLINDER EFFECTIVE AREA (CM^2)	OIL CAPACITY (CM^3)	COLLAPSED HEIGHT A (MM)	EXTENDED HEIGHT B (MM)	OUTSIDE DIAMETER D (MM)	CYLINDER BORE DIAM E (MM)	PLUNGER DIAMETER (THREADED) F (MM)	BASE TO ADVANCE PORT H (MM)	SADDLE DIAMETER J (MM)	SADDLE PROTRUSION FROM PLUNGER K (MM)	CENTER HOLE DIA. Y (MM)	WEIGHT (KG)
ACHC202	20	50	34	170	175	225	110	75	55	30	54	8	27	4.3
ACHC204		100		340	245	345	110	75	55	30	54	8	27	6.5
ACHC206		150		510	315	465	110	75	55	30	54	8	27	8.0
ACHC302	30	50	55	275	202	252	138	95	70	35	68	11.5	34	8.4
ACHC304		100		550	264.5	364.5	138	95	70	35	68	11.5	34	11.8
ACHC306		150		825	327	477	138	95	70	35	68	11.5	34	12.8
ACHC602	60	50	89.5	448	250	300	200	125	100	50	89	14	54	23.0
ACHC604		100		895	300	400	200	125	100	50	89	14	54	26.3
ACHC606		150		1342	350	500	200	125	100	50	89	14	54	27.0

ALUMINUM CYLINDERS MODEL : ALNC SERIES

Capacity: 20 - 100 Ton

Stroke: 50 - 250 mm

Spring Return, Lock Nut Type

Max. Working Pressure: 700 bar / 10,000 psi

FEATURES

- Half weight of the steel cylinders.
- Locknut extend load holding period safely.
- Large saddle surface for side load protection.
- Carrying handles are equipped with all models.
- Hard-Anodized coating reduces wear & corrosion.
- Stop rings for piston blow-out protection.
- Heavy duty spring for fast and full retraction.

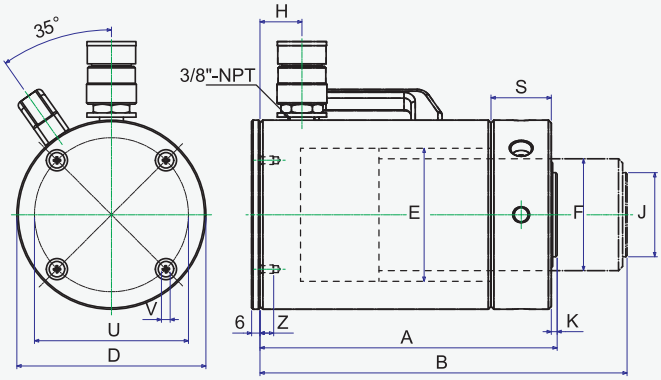

BASE PLATE MOUNTING HOLES DIMENSIONS(MM)			
MODEL NO./ CAPACITY (TON)	BOLT CIRCLE U (MM)	THREAD V (MM)	THREAD DEPTH Z (MM)
ALNC-20	70	M6x1.0	10
ALNC-30	80	M6x1.0	10
ALNC-50	110	M6x1.0	10
ALNC-100	160	M6x1.0	10

SPECIFICATIONS

MODEL NO.	CAPACITY (TON)	STROKE (MM)	CYLINDER EFFECTIVE AREA (CM²)	OIL CAPACITY (CM³)	COLLAPSED HEIGHT A (MM)	EXTENDED HEIGHT B (MM)	OUTSIDE DIAMETER D (MM)	CYLINDER BORE DIAM E (MM)	PLUNGER DIAMETER (THREADED) F (MM)	BASE TO ADVANCE PORT H (MM)	SADDLE DIAMETER J (MM)	SADDLE PROTRUSION FROM PLUNGER K (MM)	LOCK NUT HEIGHT S (MM)	WEIGHT (KG)
ALNC202	20	50	30.2	151	193	243	92	62	Tr55x3	25	40	3	25	4.8
ALNC204		100	30.2	302	243	343	92	62	Tr55x3	25	40	3	25	5.7
ALNC206		150	30.2	453	293	443	92	62	Tr55x3	25	40	3	25	6.3
ALNC208		200	30.2	604	343	543	92	62	Tr55x3	25	40	3	25	6.9
ALNC302	30	50	44.2	221	205	255	110	75	Tr60x3	25	40	3	30	6.9
ALNC304		100	44.2	442	255	355	110	75	Tr60x3	25	40	3	30	7.7
ALNC306		150	44.2	662	305	455	110	75	Tr60x3	25	40	3	30	8.6
ALNC308		200	44.2	883	355	555	110	75	Tr60x3	25	40	3	30	9.6
ALNC502	50	50	70.8	354	212	262	135	95	Tr80x4	30	60	3	43	9.3
ALNC504		100	70.8	708	262	362	135	95	Tr80x4	30	60	3	43	10.7
ALNC506		150	70.8	1063	312	462	135	95	Tr80x4	30	60	3	43	14.5
ALNC508		200	70.8	1417	362	562	135	95	Tr80x4	30	60	3	43	14.5
ALNC5010		250	70.8	1771	412	662	135	95	Tr80x4	30	60	3	43	16.5
ALNC1002	100	50	143	715	235	285	200	135	Tr105x6	45	70	3	51	21.9
ALNC1004		100	143	1431	285	385	200	135	Tr105x6	45	70	3	51	25.2
ALNC1006		150	143	2146	335	485	200	135	Tr105x6	45	70	3	51	29.2
ALNC1008		200	143	2861	385	585	200	135	Tr105x6	45	70	3	51	33.0
ALNC10010		250	143	3577	435	685	200	135	Tr105x6	45	70	3	51	35.4

CYLINDERS MODEL : NSSS SERIES

Capacity: 4.5 - 100 Ton
Stroke: 25.4 - 406 mm
Max. Working Pressure: 700 bar / 10,000 psi

FEATURES

- All cylinders are single acting with spring return.
- Pistons hard chromed.
- Cylinders inside roll-polished.
- Cylinders outside blasted with black nitriding finish.

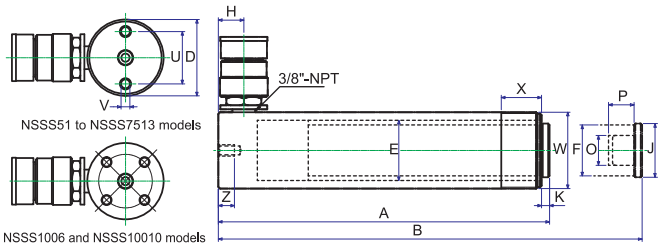

NSSS-SERIES, STANDARD CYLINDERS

MODEL NO.	CAPACITY (TON)	STROKE (MM)	OIL CAP (CM³)	A HIGHT (MM) RETRACTED	B HIGHT (MM) EXTENDED	D (Ø MM)	E (Ø MM)	F (Ø MM)	H (MM)	J (MM)	K (MM)	O (Ø UN)	P (MM)	U (MM)	V (Ø UNC)	Z (MM)	W (Ø UN)	X (MM)	WEIGHT (KGS)
NSSS51	4.5	26	17	110	136		28.6						14						1
NSSS53		76	54	165	241		30						14						1.5
NSSS55	5	127	90	216	343	38	30	25.4	19	25	6	¾"-16	14	25	¼"-20	14	1 ½"-16	28	1.9
NSSS57		183	129	273	456		30						16						2.4
NSSS59		232	164	324	556		30						16						2.8
NSSS101		25.4	36.5	90	115.4		42.8			-	-	#10-24UN	6.5						1.8
NSSS102		51	73	121	172		42.8			40	6	1"-8	19						2.3
NSSS104		101	145	171	272		42.8			40	6	1"-8	19						3.3
NSSS106	10	152.5	242	247	399.5	57	45	38	19	40	6	1"-8	19	39	5/16"-18	13	2 ¼"-14	30	4.4
NSSS108		203.5	323	298	501.5		45			40	6	1"-8	19						5.4
NSSS1010		255.5	406	350	605.5		45			40	6	1"-8	19						6.4
NSSS1012		305.5	486	400	705.5		45			40	6	1"-8	19						6.8
NSSS1014		356.5	567	451	807.5		45			40	6	1"-8	19						8.2
NSSS151		26.5	63	124	150.5				19										3.3
NSSS152		52.5	125	149.6	202.1				19										4.1
NSSS154		102.5	243	200	302.5				19										5
NSSS156		153	363	271.6	424.6				25										6.8
NSSS158	15	203.5	483	322	525.5	73	55	40	25	38	9.6	1"-8	25.4	47.7	3/8"-16	13	2 ¾"-16	30	8.2
NSSS1510		254.5	604	373	627.5				25										9.5
NSSS1512		305	724	424	729				25										10.9
NSSS1514		355.7	845	474.6	830.3				25										11.8
NSSS1516		406	824	523	829				25										12.8
NSSS251		25.5	98	139.5	165														5.9
NSSS252		51	196	165	216														6.4
NSSS254		102	392	216	318														8.2
NSSS256	25	158.5	610	273	431.5	88	70	55	25	50	10.5	1½"-16	25.4	58	½"-13	19	3 5/16"-12	50	10
NSSS258		209.5	806	324	533.5														12.2
NSSS2510		260.5	1002	375	635.5														14.1
NSSS2512		311	1196	425.5	736.5														16.3
NSSS2514		361.5	1390.5	476	837.5														17.7
NSSS308	30	209.5	925	387.5	597	103	75	60	57	50	10.5	1½"-16	25.4	-	-	-	4"-12	50	18.1
NSSS502		51	361	177	228														15
NSSS504		101.5	719	229	330.5														19.1
NSSS506	50	157.5	1116	283	440.5	127	95	80	33	70	3	-	-	95	½"-13	19	5"-12	55	23.1
NSSS508		203	1446	349	552														27.1
NSSS5010		260	1853	385	645														30.4
NSSS5013		335.5	2377	461	796.5														37.6
NSSS756	75	155	1752	285	440	152	120	95	30	70	3	-	-	-	-	-	5 ¾"-12	45	29.5
NSSS7513		333.5	3770	491	824.5														59
NSSS1002		50	715	238	288														43
NSSS1004	100	100	1430	288	388	177	135	105	40	70	3	-	-	139	¾"-10	25	6 7/8"-12	45	50
NSSS1006		170	2432	358	528														59
NSSS10010		260	3720	448	708														72.6

ACCESSORIES FOR NSSS SERIES

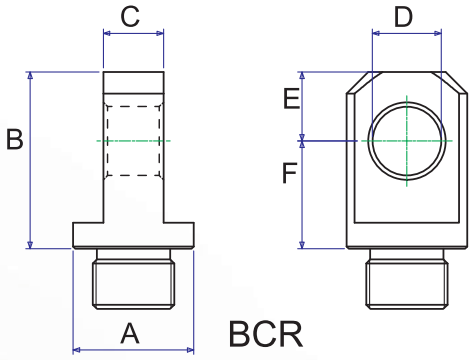

FOR NSSS 5, 10, 15 & 25 TON

PISTON CLEVIS						
MODEL	A	B	C	D	E	F
BCR5	28	41	14	16	16	25
BCR10	43	59	25	22.3	25	34
BCR15	43	62	25	22.3	25	37
BCR25	57	74	38	31.8	31	43

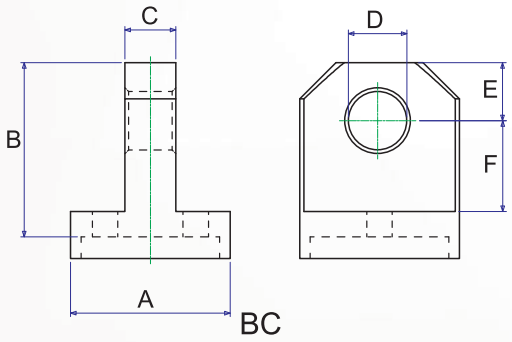

FOR NSSS 5, 10, 15 & 25 TON

BASE CLEVIS						
MODEL	A	B	C	D	E	F
BC5	44	48	14	16	16	25
BC10	63	67	25	22.3	25	35
BC15	78.5	67	25	22.3	25	35
BC25	95	79	38	31.8	31	41

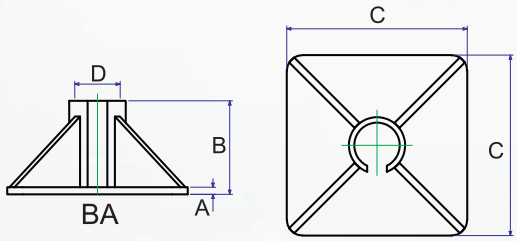

BA10 FOR NSSS102 THROUGH NSSS1014
BA25 FOR NSSS252 THROUGH NSSS2514

CYLINDER BASES				
MODEL	A	B	C	D
BA10	10	123	230	58
BA25	16	128	280	89

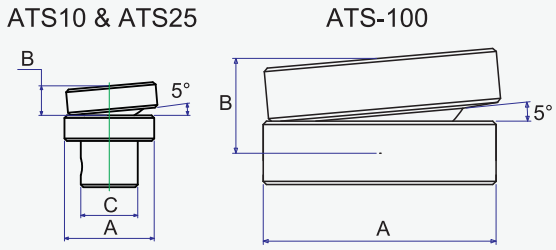

ATS10 FOR NSSS10T
ATS25 FOR NSSS25T THROUGH NSSS30T
ATS100 FOR NSSS50T THROUGH NSSS100T

ACCESSORIES TILT SADDLES			
MODEL	A	B	C
ATS10	40	11.5	22.2
ATS25	50	14	36.3
ATS100	70	28.5	-

FLAT CYLINDERS MODEL : NSLS SERIES

Capacity: 5 - 150 Ton

Stroke: 6 - 17 mm

Max. Working Pressure: 700 bar / 10,000 psi

FEATURES

- All cylinders are single acting with spring return.
- Pistons hard chromed.
- Cylinders inside roll-polished.
- Cylinders outside blasted with black nitriding finish.

HAND / FOOT PUMPS

HIGH PRESSURE ACCESSORIES

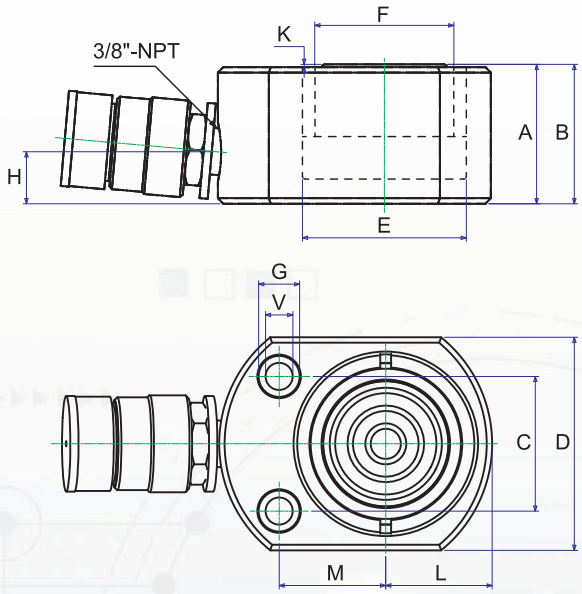

NSLS-SERIES, FLAT CYLINDERS

MODEL NO.	CAPACITY (TON)	STROKE (MM)	OIL CAP (CM³)	A HIGHT (MM) RETRACTED	B HIGHT (MM) EXTENDED	C (MM)	D (MM)	E (Ø MM)	F (Ø MM)	H (MM)	K (MM)	V (Ø MM)	G (Ø MM)	O (Ø MM)	P (Ø MM)	U (MM)	L (MM)	M (MM)	WEIGHT (KG)
NSLS50	5	6	4.5	33	39	28.5	58.5x44	31	25.4	16	1	5.3	9.5	-	-	-	22	22	0.7
NSLS100	10	12	18.0	42	54	36.5	82.5x60	44	38	19	1	7.5	11	-	-	-	30	34	1.6
NSLS200	20	12	34.0	51	63	49.3	100x78	60	50.8	19	1	10	15	-	-	-	39	39	2.6
NSLS300	30	13	54.0	58	71	52.3	117.5x95	73	63.5	19	2	10	16	-	-	-	47.5	47.5	4.5
NSLS500	50	16	113.0	66	82	66.5	145x115	95	70	19	2	11	19	-	-	-	57.5	58	6.8
NSLS750	75	16	180.0	79	95	76.2	170x145	120	82.5	19	2	13.5	20.5	-	-	-	72.5	70	11.3
NSLS1000	100	16	229.0	85	101	76.2	185x160	135	92	19	2	13.5	20.5	-	-	-	80	78	14.5
NSLS1500	150	17	363.0	100	117	117	225x195	165	115	23	2	13.5	20.5	-	-	-	97.5	85	26.3

HYDRAULIC PUMPS

ALUMINUM HAND PUMPS MODEL : AHP & UHP SERIES

Dual-speed models
Large 3/8" NPT pressure port for maximum flow
Max. working pressure: 700 - 2800 bar

FEATURES

- Rugged construction and light handle efforts.
- Aluminum Alloy construction and handy release knob with anti-losing mechanism are truly suitable to industrial requirements and your daily works.
- The light weight design is ideally for easy operation and portability.
- Double action design on AHP703D is ideal for double acting cylinders, no extra control valve and adapters are requested.
- UHP2800 brings you special ultra high pressure application but with light weight.
- UHP2800JQ directly mounted with Pressure gauge and no extra adaptors needed. More efficient and convenient.

AHP703D

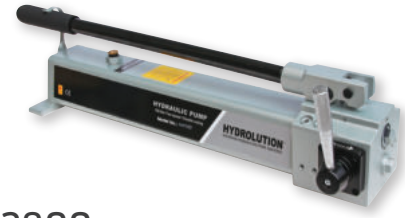

UHP2800

AHP705

AHP701

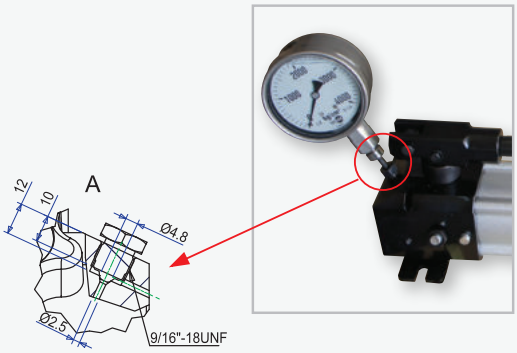

The gauge can be mounted directly on UHP2800JQ, the cone thread for gauge port is 9/16"-18UNF

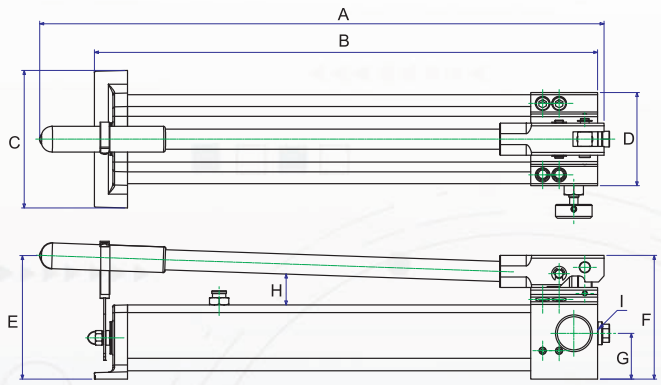

SPECIFICATIONS

MODEL NO.	PRESSURE RATING (BAR)		OIL CAPACITY (C.C.)	USABLE OIL CAPACITY (C.C.)	OIL VOLUME PER STROKE (C.C.)		A (MM)	B (MM)	C (MM)	D (MM)	E (MM)	F (MM)	G (MM)	H (MM)	I	WEIGHT (KGS)
	1ST STAGE	2ND STAGE			1ST STAGE	2ND STAGE										
AHP701	20	700	500	350	12.9	1.65	391	361	110	77	140	127	42.5	37	3/8"-NPT	2.3
AHP702	20	700	1000	750	12.9	1.65	542	513	110	77	130	127	42.5			3.5
AHP703	20	700	2000	1620	12.9	2.30	623	556	150	102	135	135	50			6
AHP703D	20	700	2000	1620	12.9	2.30	623	556	150	102	135	135	24/37			7.0
AHP704	20	1000	1000	750	12.9	1.65	539	501	110	77	145	127	42.5			3.5
AHP705	20	1500	2000	1620	12.9	1.00	699	629	150	102	152	157	50		3/4"-16UNF	6.7
UHP2800	20	2800	1000	700	12.9	0.65	620	488	79.5	140	157	156.5	26		3/4"-16UNF	6.7
UHP2800JQ	20	2800	1000	700	12.9	0.65	617	568	79.5	140	157	156.5	93		G1/4"	6.7

STEEL HAND PUMPS MODEL : HA-HF SERIES

Single & Dual-speed models
Large 3/8" pressure port for maximum flow.
Max. working pressure: 200 & 700 bar

FEATURES

- Rugged construction and light handle efforts.
- Handy release knobs with anti-leaking mechanism are truly suitable to industiral requirement and your daily works.
- Both single and Dual-speed models are available.
- Internal overload relief valve prevents pump from being used beyond its rated capacity.
- External adjustable relief valve with anti-losing mechanism design.
- Carrying handle for easy portability.
- HE2421 equipped with Control valve for applying with double action cylinders.

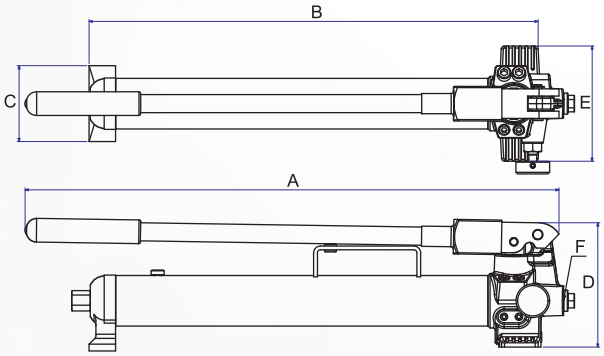

HE2421

HC1500

HE2000 HB350

SPECIFICATIONS

MODEL NO.	PRESSURE RATING (BAR)		OIL CAPACITY (C.C.)	USABLE OIL CAPACITY (C.C.)	OIL VOLUME PER STROKE (C.C.)		A (MM)	B (MM)	C (MM)	D (MM)	E (MM)	OIL PORT THREAD F	WEIGHT (KGS)
	1ST STAGE	2ND STAGE			1ST STAGE	2ND STAGE							
HB350	20	200	350	250	13.0	2.8	342	310	66	148	137	3/8 NPT	5.9
HB600	20	700	750	550	13.0	2.8	542	480	90	148	137	3/8 NPT	7.6
HB700	20	700	850	640	13.0	2.8	633	528	90	148	137	3/8 NPT	8
HC1500	20	700	1500	1200	13.0	2.8	633	551	106	200	142	3/8 NPT	11.2
HC2500	20	700	2500	2200	13.0	2.8	713	632	106	200	142	3/8 NPT	12
HE2000	20	700	2100	1800	13.0	2.8	580	523	140	189	148	3/8 NPT	11.5
HE2421	20	700	2100	1800	13.0	2.8	580	523	140	189	148	-	12.0
HF350	20	700	350	280	7.0	1.0	343	310	66	127	142	3/8 NPT	5.5
HA350	200		350	280	3.2		332	292	90	148	137	3/8 NPT	5.7
HA600	700		750	550	3.2		542	478	90	148	137	3/8 NPT	7.1
HA700	700		850	640	3.2		632	526	90	148	137	3/8 NPT	7.6
HD300	700		300	200	2.8		330	283	90	127	130	1/4 NPT	4.4
HD500	700		500	400	2.8		530	469	90	127	130	1/4 NPT	5.4

7L RESERVOIR HAND PUMPS MODEL : HP80 & HP80D SERIES

Dual-speed models
Large 3/8" NPT pressure port for max. flow
Heavy-Duty, Large reservoir
Max. working pressure: 700 bar

FEATURES

- Casting tank made of steel.
- Internal overload relief valve prevents pump from being used beyond its rated capacity.
- HP80D is ideal for double-acting cylinders without the need for additional control valve.

HP80

HP80D

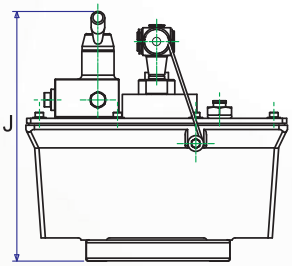

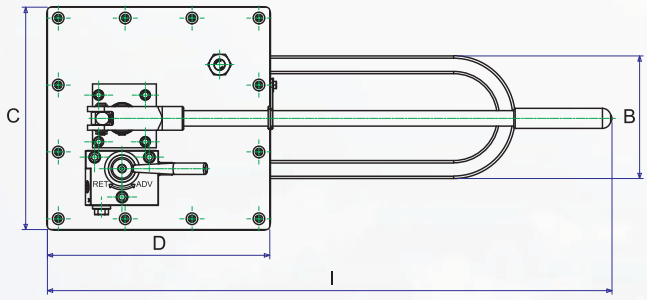

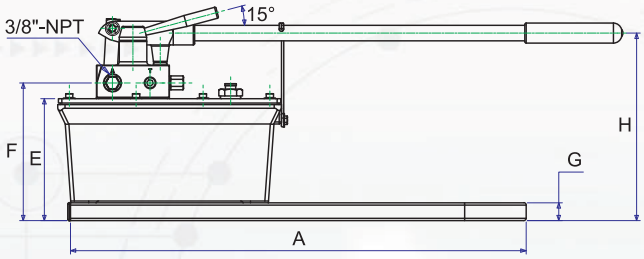

SPECIFICATIONS

MODEL NO.	PRESSURE RATING (BAR)		OIL CAPACITY (C.C.)	OIL VOLUME PER STROKE (C.C.)		A (MM)	B (MM)	C (MM)	D (MM)	E (MM)	F (MM)	G (MM)	H (MM)	I (MM)	J (MM)	WEIGHT (KG)
	1ST STAGE	2ND STAGE		1ST STAGE	2ND STAGE											
HP80	27.5	700	8000	113	4	635	171	310	310	170	192	25	261	787	298	24.7
HP80D	27.5	700	8000	113	4	635	171	310	310	170	196	25	261	787	298	27.5

STEEL FOOT PUMPS MODEL : FHA & FHB SERIES

Single & Daul-speed models
Large 3/8" NPT pressure port for max. flow
Low handle force for easy operation
Max. working pressure: 700 bar

FEATURES

- Unique foot pumps are characterized by their the exquisite design durability and stability.
- Foot-operated pump and release pedal provide the for operating in different working conditions.
- Both Single and Dual-Speed are available.
- Foot pedal with spring return is convenience and easy to use.
- Internal overload valve prevents pump from being used beyond its rated capacity.

HAND / FOOT PUMPS

HIGH PRESSURE ACCESSORIES

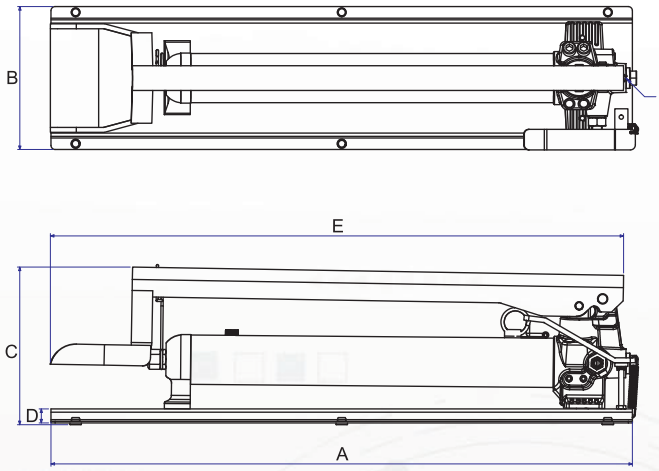

SPECIFICATIONS

MODEL NO.	PRESSURE RATING (BAR)		USABLE OIL CAPACITY (C.C.)	OIL VOLUME PER STROKE (C.C.)		A (MM)	B (MM)	C (MM)	D (MM)	E (MM)	OIL PORT THREAD F	WEIGHT (KGS)
	1ST STAGE	2ND STAGE		1ST STAGE	2ND STAGE							
FHA350	700		350	3.1		474	174	192	17	461	3/8 NPT	8.4
FHA600	700		600	3.1		660	174	192	17	647	3/8 NPT	10.3
FHA700	700		700	3.1		708	174	192	17	695	3/8 NPT	11.5
FHB350	13.8	700	350	13.0	2.8	474	174	192	17	461	3/8 NPT	8.8
FHB600	13.8	700	600	13.0	2.8	660	174	192	17	647	3/8 NPT	10.8
FHB700	13.8	700	700	13.0	2.8	708	174	192	17	695	3/8 NPT	12

AIR HYDRAULIC FOOT PUMP MODEL : AP1600 SERIES

Single & Double acting models
Max. working pressure : 700 bar

AP1600D

FEATURES

- Air-power hydraulic pump is designed for using with single -acting cylinders and tools.
- Rugged construction and most components are made of Aluminum alloy and built for long service life, easy operation and portability.
- Automatic overload relief valve setting as 10,000 psi protects components in hydraulic system and ensure work safety.
- New Inlet & Outlet design features low exhausting air volume, quiet effect and can be operated in all directions.
- Oil capacity can be modified according to your specific application.

AP1600S

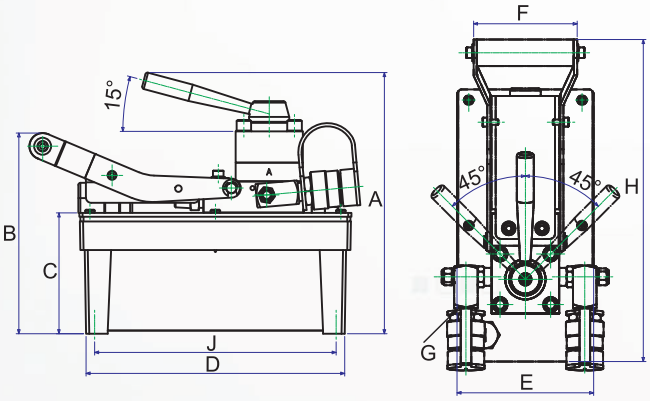

AP1600D

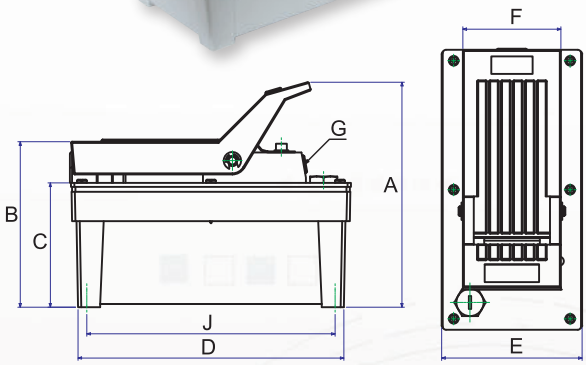

AP1600S

SPECIFICATIONS

MODEL NO.	ACTING	MAX. PRESSURE OUTPUT (PSI)	VALVE		OIL DEL. (C.C./MIN. @)*			
			TYPE	FUNCTION	0(PSI)	100(PSI)	5000(PSI)	10000(PSI)
AP1600S	Single	10,000	-	Advance	1250	-	-	195
AP1600D	Double	10,000	3 Position / 4 Way	Advance/ Hold/Retract	1250	-	-	195

MODEL NO.	INPUT AIR PRESSURE (KG)	RESERVOIR CAPACITY (C.C.)	USABLE OIL CAPACITY (C.C.)	A (MM)	B (MM)	C (MM)	D (MM)	E (MM)	F (MM)	G (MM)	H (MM)	J (MM)	WEIGHT (KG)
AP1600S	7-10	1600	1300	207	152	114	244	129	90	3/8"-NPT	-	228	7.3
AP1600D	7-10	1600	1300	207	152	114	244	129	98	3/8"-NPT	304	228	9.3

AIR HYDRAULIC FOOT PUMP MODEL : AP3000 SERIES

Single & Double acting models
Max. working pressure : 700 bar

AP1300D

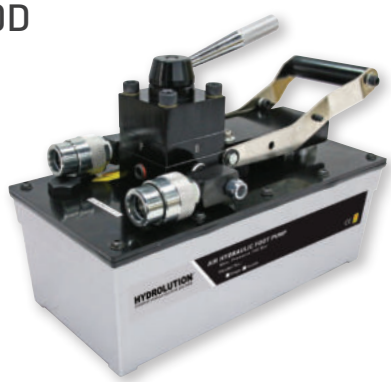

AP1300S

FEATURES

- Air-power hydraulic pump is designed for using with single -acting cylinders and tools.
- Rugged construction and most components are made of Aluminum alloy and built for long service life, easy operation and portability.
- Automatic overload relief valve setting as 10,000 psi protects components in hydraulic system and ensure work safety.
- New Inlet & Outlet design features low exhausting air volume, quiet effect and can be operated in all directions.
- Oil capacity can be modified according to your specific application.

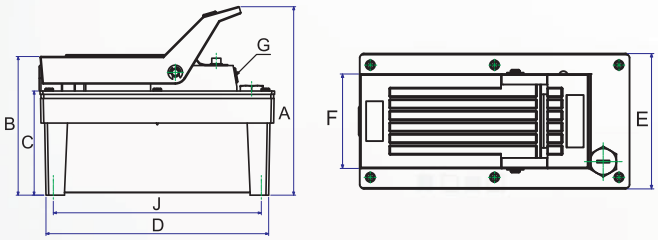

AP3000S

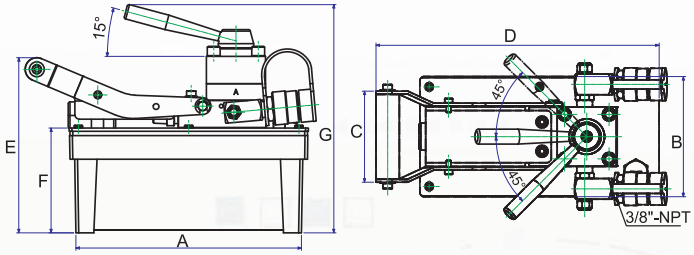

AP3000D

SPECIFICATIONS

MODEL NO.	ACTING	MAX. PRESSURE OUTPUT (PSI)	VALVE		OIL DEL. (C.C./MIN. @)*			
			TYPE	FUNCTION	0(PSI)	100(PSI)	5000(PSI)	10000(PSI)
AP3000S	Single	10,000	-	Advance	1250	-	-	195
AP3000D	Double	10,000	3 Position / 4 Way	Advance/ Hold/ Retract	1250	-	-	195

MODEL NO.	INPUT AIR PRESSURE (KG)	RESERVOIR CAPACITY (C.C.)	USABLE OIL CAPACITY (C.C.)	A (MM)	B (MM)	C (MM)	D (MM)	E (MM)	F (MM)	G (MM)	H (MM)	J (MM)	WEIGHT (KG)
AP3000S	7-10	3000	2500	247	190	114	309	160	90	3/8"-NPT	-	289	9.1
AP3000D	7-10	3000	2500	247	190	114	309	160	98	3/8"-NPT	343	289	12.0

AIR HYDRAULIC FOOT PUMP MODEL : AP8000 SERIES

Single & Double acting models
Max. working pressure : 700 bar

AP8000S

FEATURES

- Air-power hydraulic pump is designed for using with single -acting cylinders and tools.
- Rugged construction and most components are made of Aluminum alloy and built for long service life, easy operation and portability.
- Automatic overload relief valve setting as 10,000 psi protects components in hydraulic system and ensure work safety.
- New Inlet & Outlet design features low exhausting air volume, quiet effect and can be operated in all directions.
- Oil capacity can be modified according to your specific application.

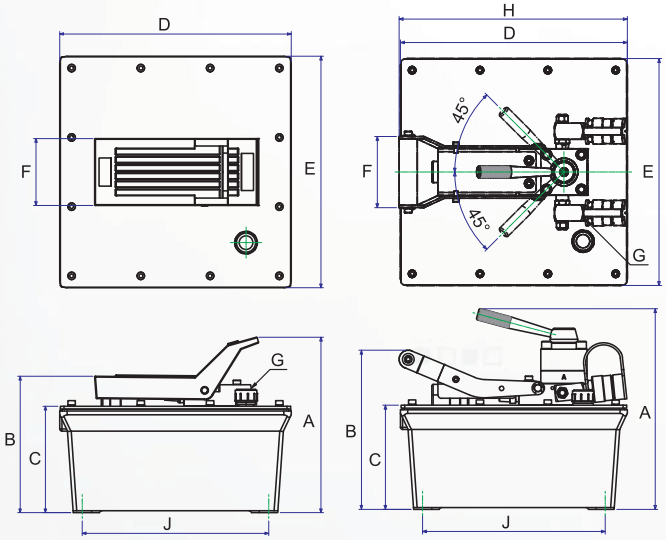

HOSES & ADAPTORS

MANIFOLDS & CONTROL VALVES

SPECIFICATIONS

MODEL NO.	ACTING	MAX. PRESSURE OUTPUT (PSI)	VALVE		OIL DEL. (C.C./MIN. @)*			
			TYPE	FUNCTION	0(PSI)	100(PSI)	5000(PSI)	10000(PSI)
AP8000S	Single	10,000	-	Advance	1250	-	-	195
AP8000D	Double	10,000	3 Position / 4 Way	Advance/ Hold/ Retract	1250	-	-	195

MODEL NO.	INPUT AIR PRESSURE (KG)	RESERVOIR CAPACITY (C.C.)	USABLE OIL CAPACITY (C.C.)	A (MM)	B (MM)	C (MM)	D (MM)	E (MM)	F (MM)	G (MM)	H (MM)	J (MM)	WEIGHT (KG)
AP8000S	7-10	8000	7200	236	184	143	311.6	311.6	90	3/8"-NPT	-	251	19.1
AP8000D	7-10	8000	7200	276	218	143	311.6	311.6	98	3/8"-NPT	313	251	31.5

ELECTRIC PUMPS MODEL : EP13 SERIES

ELECTRIC PUMPS, 3 LITER,
700 BAR/10,000psi

EP13S-EP13D

FEATURES

- Original pumps are built with 1/2 HP, 220V, 50/60Hz, Single phases universal brushless motor.
- Internal relief valve (700 bars) protects the components and work safety.
- Pumps are included with 24V, 3 meters remote control cord.
- Quiet pumps comply OSHA noise limitation (80dBA at 700bar).
- EP13D specially designed for double-acting cylinders without the need for additional control valve and adapters.
- Conform to CE standards.
- Both models are available with Solenoid Valve version.

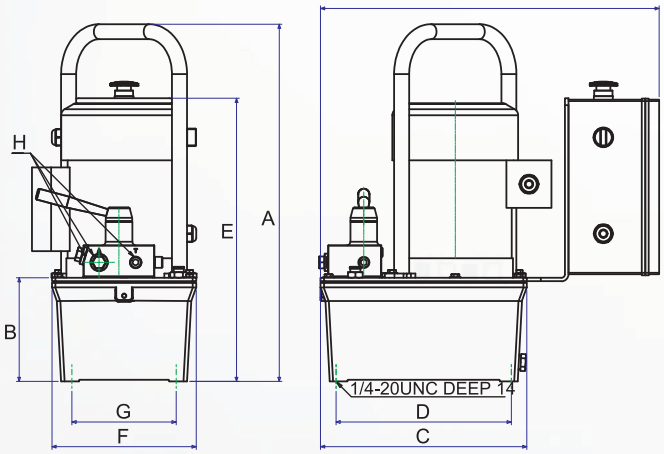

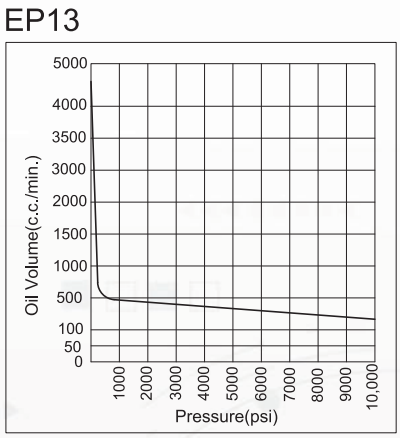

SPECIFICATIONS

MODEL NO.	ACTING	RPM 50/60 HZ	RESERVOIR CAPACITY (C.C.)	USABLE OIL CAPACITY (C.C.)	MOTOR	MAX. PRESSURE OUTPUT (PSI)	VALVE		OIL DEL. (C.C./MIN. @)*			
							TYPE	FUNCTION	0(PSI)	100(PSI)	5000(PSI)	10000(PSI)
EP13S EP13SS*	Single	2860/3450	3,000	2,400	0.45 kW 110V / 220V	10,000	2 Position / 2 Way	Hold /Retract	4,000	2,800	330	280
EP13D EP13DS*	Double	2860/3450	3,000	2,400	50 / 60 Hz Single Phase	10,000	3 Position / 4 Way	Adv./Hold /Retract	4,000	2,800	330	280

MODEL NO.	A (MM)	B (MM)	C (MM)	D (MM)	E (MM)	F (MM)	G (MM)	H	J (MM)	WEIGHT (KG)
EP13 Series	511.5	148.5	295.5	251	406	206.5	149.4	3/8"-NPT	485	27

* Solenoid Valve version.
** The weight is excluding the hydraulic oil.

ELECTRIC PUMPS MODEL : EP5100

USABLE OIL CAP. : 80L
OIL CAPACITY : 100L

FEATURES

- Dual-speed high output pump delivers up to 16 l/min of oil.
- Low noise level of 73 - 80 dBA.
- Pump prewired at factory with 7.46kW, 380V, 50 Hz, 3 phase universal brushless motor.
- 24 volt control circuits on units with remote controls for user/operator safety.
- 3 phase motor with thermal overload protection and has all the electric components necessary to operate the pump.
- Power switch are 24 volts. EP5100D has a 4-way/3-position manual valve. EP5100DS has a 4-way/3-position solenoid valve with a 24 volt remote switch.
- 100L (80L usable) reservoir has a low oil level sight gauge.

EP5100D

EP5100DS

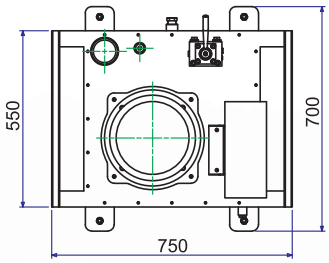

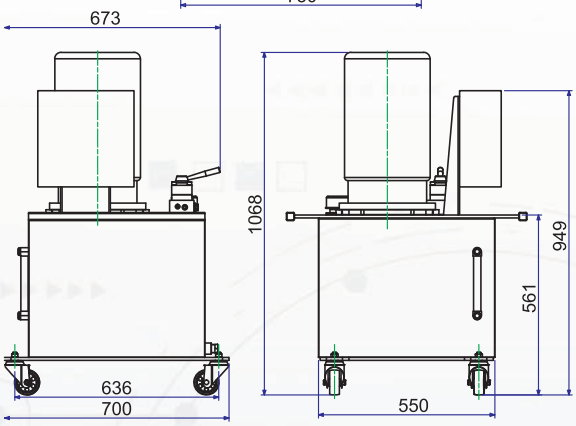

EP5100

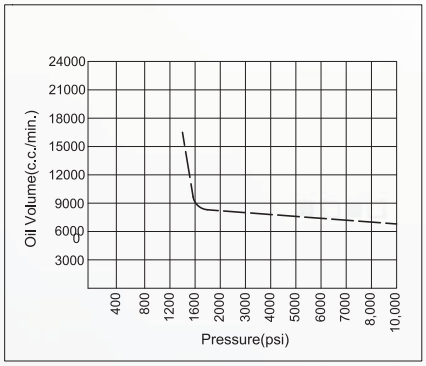

SPECIFICATIONS

MODEL NO.	RPM	RESERVOIR CAPACITY (LITER)	USABLE OIL CAPACITY (LITER)	MOTOR	MAX. PRESSURE OUTPUT (PSI)	AMP DRAW @10,000PSI	VALVE		OIL DEL. (LITER/ MIN. @)*			
							TYPE	FUNCTION	220(PSI)	1300(PSI)	5000(PSI)	10000(PSI)
EP5100D	1437	100	80	7.46 kW /380 V 50 Hz / 3 phase	10,000	6	3 Position / 4 Way	Adv./Hold /Retract	16	14	6	5.6
EP5100DS												

MODEL NO.	A (MM)	B (MM)	C (MM)	D (MM)	E (MM)	F (MM)	WEIGHT* (KG)
EP5100 Series	1069	561	550	700	636	750	240

* The weight is excluding the hydraulic oil.

HYDRAULIC PULLERS

PACKAGE MODEL : PM SERIES

FEATURES

- Four stages of foldable & removable handle saves the handle force during operation.
- 360° Rotary Socket.
- Self-contained hydraulic pump and puller body with integral safety valve.
- Spring loaded live centering nut for easy job (removable).
- 2 jaws puller cross head with manganous-phosphate plated for rust proof and durability.
- Package including puller body, jaw assembly, cross bearing, extension bar and blow molded case for practical and safe works.

PM420-PM1220

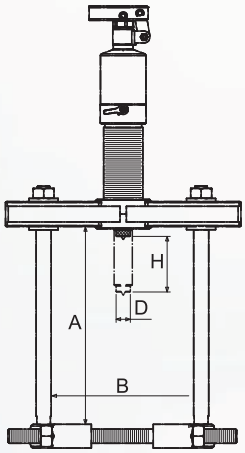

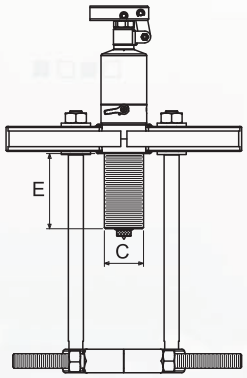

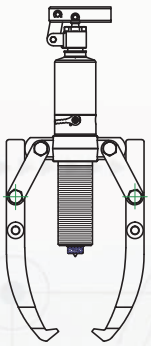

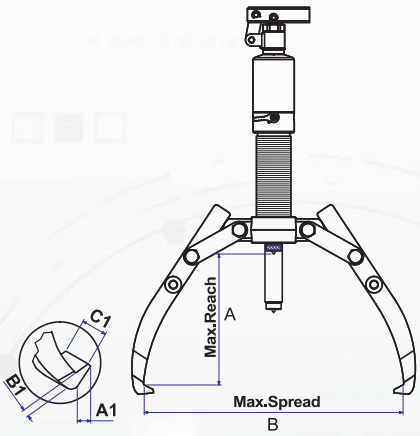

SPECIFICATIONS

CAPACITY	MODEL NO.	REACH (MAX. MM)	SPREAD (MAX. MM)	STROKE (MM)	PUMP TIP (MM)			JAW TIP (MM)			WEIGHT (KG)
		A	B	H	C	D	E	A1	B1	C1	
4 Ton	PM420	185/224	255/145	60	42	22	84	11	6	22	12.4
6 Ton	PM620	220/255	330/220	70	45	23	90	13	10	22	17.0
8 Ton	PM820	230/255	350/230	85	50	25	122	11	10	25	20.0
12 Ton	PM1220	270/298	375/310	85	60	28	115	14	10	29	17.2 /20.6 (puller / acc. set)

PUSH PULLER / THREE-IN-ONE MODEL : PD SERIES AND MD SERIES

USER-FRIENDLY

- Unique & Patented double action pump body to provide the pushing and pulling force.
- Unique jaw design for installing and outer pulling without removing and changing.
- Three jaw structure provides the even and constant force whenever for installing, outer pulling and inner pulling.
- The extension bars can be used where necessary for reach.
- Self-centering design on inner puller provides the even force and prevent the jaws from sliding off during operating.

SAFE

- The built-in safety valve prevents the user being harmed and work object being damaged by rated pressure which can not be reset or adjusted.
- Most parts are forged SCM440 alloy steel, creating a durable and safe product.

COST SAVING

- The Three-in-One design reduces tool-reset time and duration of operation.
- This push puller is ideal for installing and dismantling a wide variety of press-fit parts, including bushings, wheels, bearings, gears and pulleys.

INNER PULLING

PUSHING

OUTER PULLING

PD12080

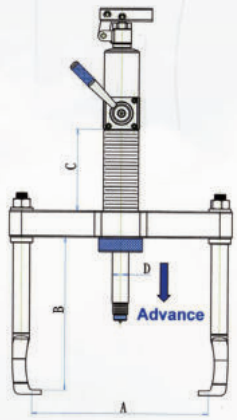

MD6203

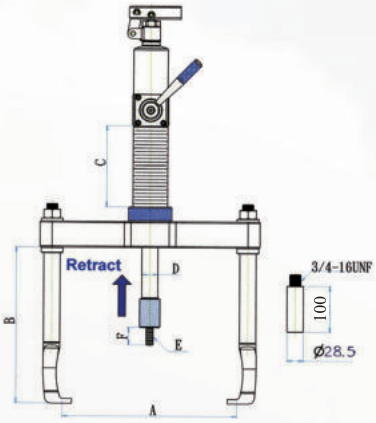

PUSH PULLER / THREE-IN-ONE MODEL : PD SERIES AND MD SERIES

PDR12080

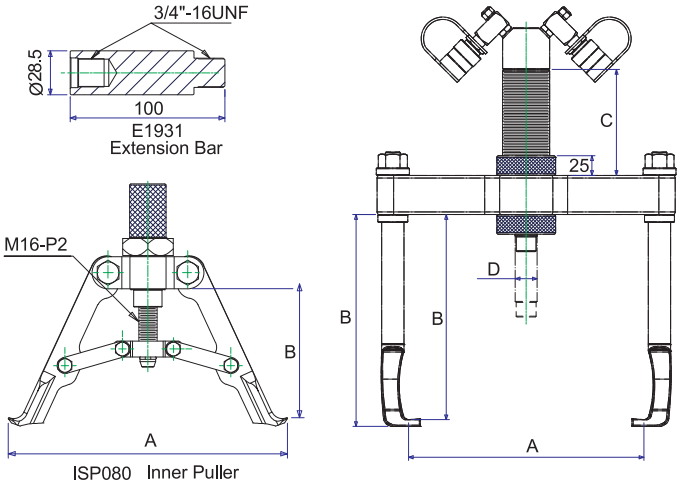

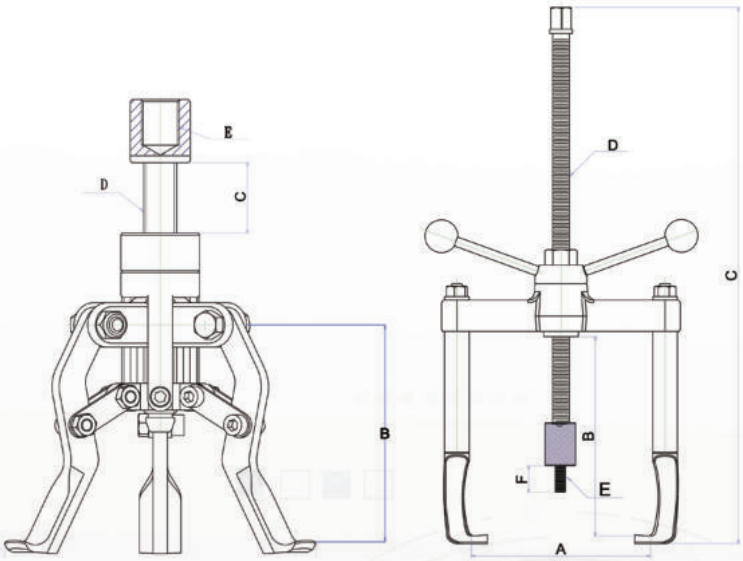

SPECIFICATIONS

MODEL NO.	OPERATION	OUTPUT (TONS)	A (MM)	B (MM)	C (MM)	D (MM)	E (MM)	F (MM)	WEIGHT (KGS)
PD12080	Installing	8	44-280	270	135	28	M12-P1.75	34	36
	Outer Pulling	12	85-300	260	135	28	-	-	-
	Inner Pulling	8	90-245	130-150	-	-	1"-12UNF	-	-
PDR12080	Installing	8	44-280	270	135	28	M12-P1.75	34	34
	Outer Pulling	12	85-300	260	135	28	-	-	-
	Inner Pulling	8	90-245	130-150	-	-	1"-12UNF	-	-
MD6203	Installing	8	70-206	240	720	3/4"-10UNC	M12-P1.75	34	12
	Outer Pulling	8	29-186	230	720	3/4"-10UNC	-	-	-
	Inner Pulling	8	52-150	130-150	34	5/8"-11UNC	3/4"-10UNC	-	-

Hand pumps suggetsed for PDR12080: AHP703D or P550D.

100 & 150 TON EASY PULLER MODEL : PME SERIES

Simple & Easy, User-Friendly,
Safety and Cost Saving - Our Goals Always!

FEATURES

- Double acting hydraulic system for holding, opening & closing jaws for safe & secure grip on work object always.
- Self-centering design keeps puller jaws clamp work object evenly and automatically.
- Electrical Hydraulic Pump advances and retracts the pushing cylinder only to prevent operating errors from happening.
- The easy jaw head adjusting system prevents puller jaws from sliding and spring off the work object being pulled always.
- Puller can be converted into 2 or 3-WAY configurations.
- Puller can be adjusted with 5 degree up/down of puller centerline for precisely positioning.

PME100T-PME150T

- The cart swivel castors provide movement of cart easily.
- Electrical Hydraulic Pump is two stage version; the low pressure stage provides the fast stroking to save time ; the high pressure stage is controlled by remote switch.
- 100 Ton Cylinder is 2-stages, spring return type with a maximum working pressure of 10,000 psi.
- Five extension adapters are standard attachments for the needs on extra stroke.
- Integrated Control System for operating Lift and Push easily and efficiently by Electric Pump only.
  (Equipment on requesting)

100 TON EASY PULLER

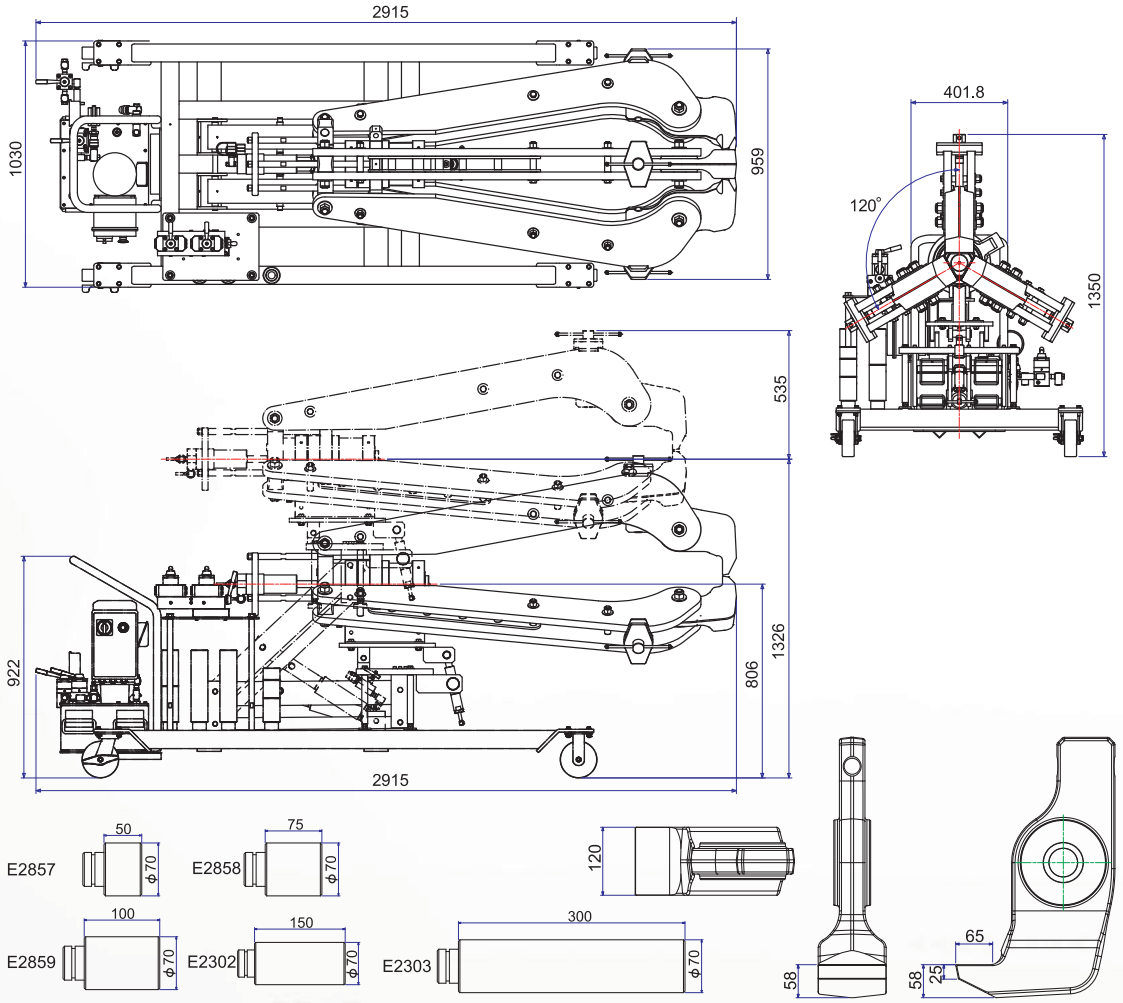

EXTENSIONS & JAW TIP

PART NO.	DIA. (MM)	LENGTH (MM)	QTY (PC)	JAW TIP DIMENSIONS (MM)
E2857	70	50	1	Tip Depth: 65 Tip Clearance: 25 - 58 Tip Width: 120
E2858		75	1	
E2859		100	1	
E2302		150	2	
E2303		300	2	

SPECIFICATIONS

MODEL NO.	REACH (MIN-MAX)	SPREAD (MIN-MAX)	STROKE (MM)	OVERALL DIMENSIONS (MM)	POWER SOURCES	WEIGHT (KGS)
PME100T	952-1220	300-1500	270	2915x1035x1350	-	1083
PME100TE*	952-1220	300-1500	270	2915x1035x1350	-	1189

*This model is equipped with the Electric Pumps according to Customer's requirement.
*ELECTRIC PUMPS : We suggest two models of EP211 & EP420 as the options. Please contact with our sale for further information.

150 TON EASY PULLER

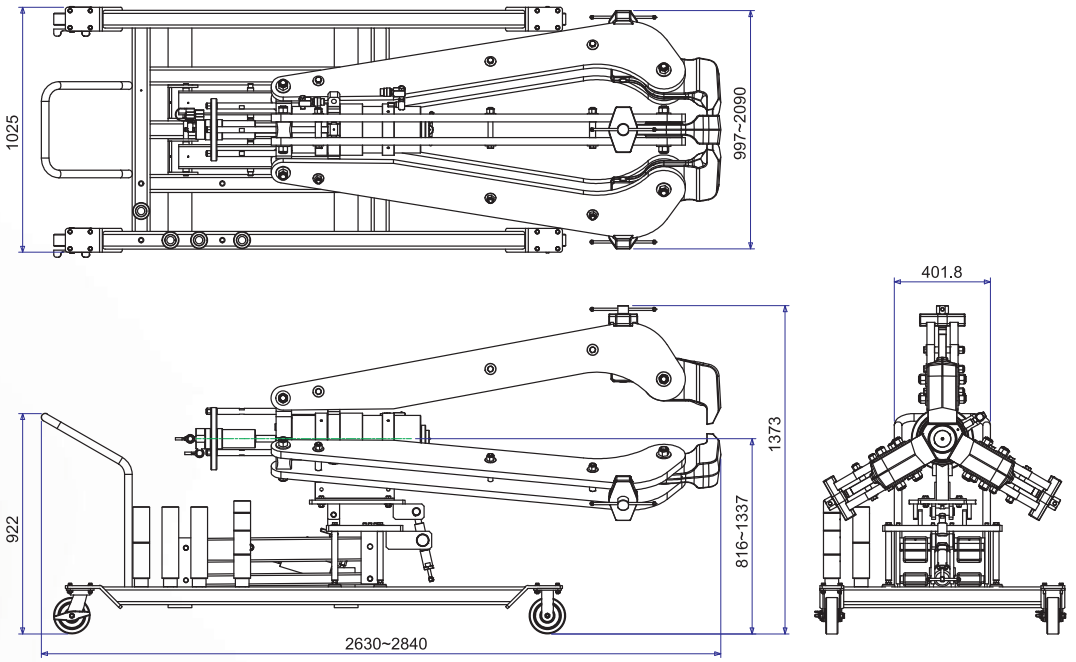

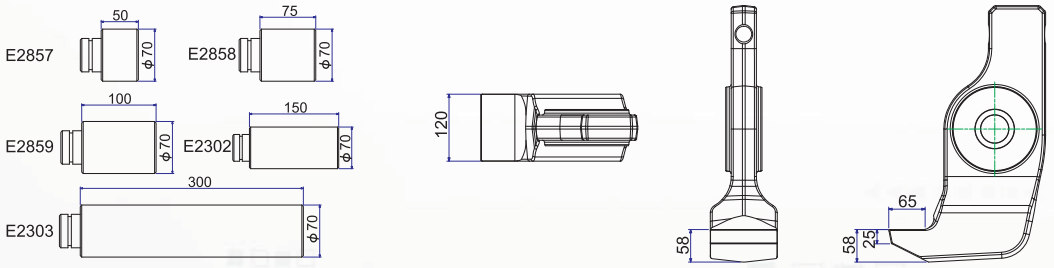

EXTENSIONS & JAW TIP

PART NO.	DIA. (MM)	LENGTH (MM)	QTY (PC)	JAW TIP DIMENSIONS (MM)
E2857	70	50	1	Tip Depth: 65 Tip Clearance: 25 - 58 Tip Width: 120
E2858		75	1	
E2859		100	2	
E2302		150	2	
E2303		300	2	

SPECIFICATIONS

MODEL NO.	REACH (MIN-MAX)	SPREAD (MIN-MAX)	STROKE (MM)	OVERALL DIMENSIONS (MM)	POWER SOURCES	WEIGHT (KGS)
PME150T	970-1175	300-1650	330	2990x1030x1390	-	1158
PME150TE*	970-1175	300-1650	330	2999x1030x1390	EP420	1223

*This model is equipped with the Electric Pump - EP420 & Control Panel System.

HYDRAULIC SPREADERS

MODEL SR SERIES AND TL SERIES

FEATURES

- Ideal for numerous industrial maintenance repair jobs.
- Accurate height adjustments (for instance shaft alignment) can easily be executed by one person.
- Easy, light and very practical to use.
- Particularly suitable when available space is very limited. from 5 to 40 mm.
- Due to the reduced thickness of the jaws, made of high quality hardened steel, these multi-functional wedges can be used for jobs where working space is extremely limited.

SR15BG

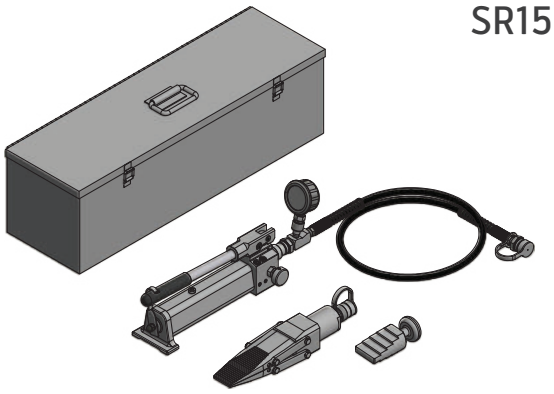

TL07BG MAX

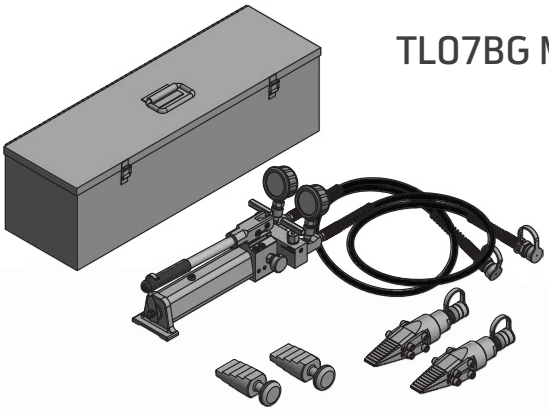

SR17

TL07

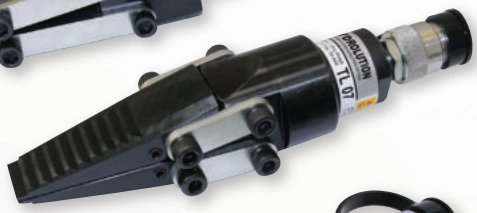

SR07

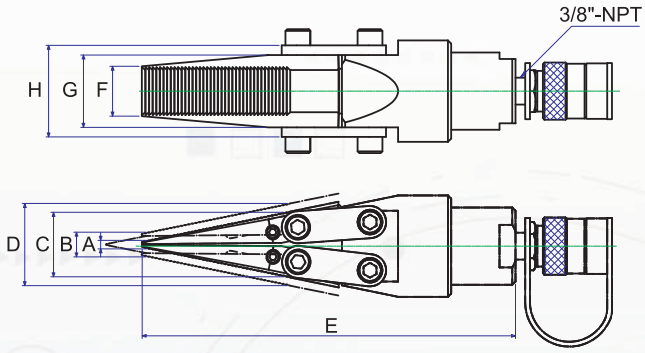

SPECIFICATIONS

MODEL NO.	CAPACITY TONS	SPREAD (MM)		STROKE (MM)	C (MM)	D (MM)	E (MM)	F (MM)	G (MM)	H (MM)	WEIGHT (KGS)
		MIN - A	MAX - B								
SR07	15	5	15	25	40	50	232	31	45	57	3.5
SR07BG	15	5	15	25	40	50	232	31	45	57	14.5
SR07BG MAX	15 x 2	5	15	25	40	50	232	31	45	57	27.0
TL07	15	5	15	25	36	46	232	31	45	57	3.5
TL07BG	15	5	15	25	36	46	232	31	45	57	14.5
TL07BG MAX	15 x 2	5	15	25	36	46	232	31	45	57	27.0
SR15	25	7	23	65	42.5	59	342	50.5	70	82	8.0
SR15BG	25	7	23	65	42.5	59	342	50.5	70	82	24.0
SR15BG MAX	25 x 2	7	23	65	42.5	59	342	50.5	70	82	36.0

NUT SPLITTERS

NUT SPLITTERS 10-50 TON MODEL : HNS SERIES

FEATURES

- Compact design used in confined space with enough force to split the rusted nuts.
- All models feature a rugged one-piece cutting frame coupled to a heavy-duty hydraulic cylinder.
- Specially designed " tool steel " cutter blade cuts the nut to the precise point where it cracks.
- Unique angled head design to keep full contact with the nut being penetrated.
- Unique angled cutter blade with radius to have the greater resistance to cutting and breaking nuts.
- 5 popular models applicable to cover the most range of nuts.

HNS5060

HNS2432

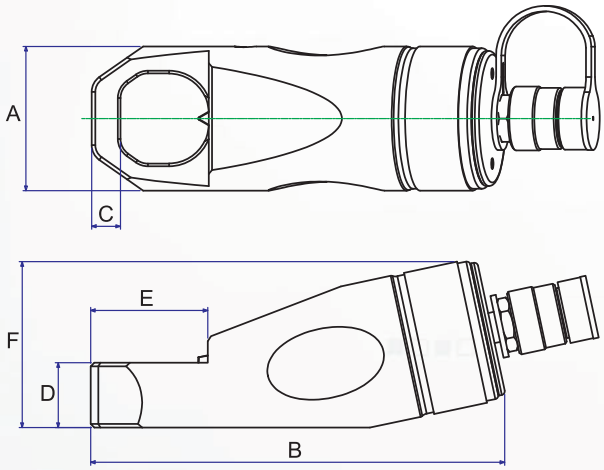

HNS3241

SPECIFICATIONS

MODEL NO.	HEXAGON NUT RANGE (MM)	BOLT RANGE (MM)	CAPACITY (TON)	OIL CAPACITY (C.C.)	DIMENSIONS(IN)						WEIGHT (KGS)
					A(MM)	B(MM)	C(MM)	D(MM)	E(MM)	F(MM)	
HNS1924	19-24	M12-M16	10	18	60	171.5	10	25	40	68	2.6
HNS2432	24-32	M16-M22	15	40	70	192	13	30	52	79	3.6
HNS3241	32-41	M22-M27	20	68	80	230	16	36	65	92	5.5
HNS4150	41-50	M27-M33	35	150	100	286	21	45	76	116	11.2
HNS5060	50-60	M33-M39	50	250	117	321	24	54.5	92	134	15.1

Notes: The Hardness of Nut Material must not excess HRc-44.
Should not be used on stainless steel nuts and/or square shape nuts.

PORTABLE POWER KITS MODEL : PA SERIES

FEATURES

- Quick "snap together" design for fast and easy assembly and disassembly.
- Extra thick extension tubes design for more strength and bendless.
- Blow molded case for organized component storage and easy to carry. The case for 10 Ton kit has wheels for good mobility.
- Single-speed pump delivers 10,000 psi and with automatic overload system against operator injury.

- Flexible hydraulic hose with spring guards at both ends.
- Dropping forged pump base and rugged welded constructions prevent collision and deformation.
- Components are also made by forging with the best rigidity and strength to ensure never broken during operation with high safety.
- Each components are connected through female connector for easy operation.

PA904A

ITEM	PARTS NO.	DESCRIPTION
01	PA350	Hydraulic Pump
02	HS236	Hose 6 feet
03	RA404	4 Ton Ram, 4" Stroke, 1/4NPT
04	SR05A	1/2 Ton spreader ram
05	B0523	16" Extension tube
06	B0524	12" Extension tube
07	B0525	8" Extension tube
08	B0526	4" Extension tube
09	B0467	Male connector
10	F0180	Flat base
11	F0181	90o "V" base
12	F0182	Wedge head
13	F0183	Spreader Plunger Toe
14	F0184	Spreader Ram Toe
15	B0013	Flex head
16	F0179	Serrated saddle
17	G0026	Blow molded case
N.W. 18.6KG G.W. 19.6KG CUFT. 1.4		

PA910A

ITEM	PARTS NO.	DESCRIPTION
01	PA600	Hydraulic Pump
02	HS336	Hose 6 feet
03	RA106L	10 Ton Ram, 6" Stroke, 3/8NPT
04	SR05E	1/2 Ton spreader ram
05	B0519	19" Extension tube
06	B0520	14" Extension tube
07	B0521	10" Extension tube
08	B0522	5" Extension tube
09	B0406	Male connector
10	F0174	Flat base
11	F0175	90o "V" base
12	F0176	Wedge head
13	F0177	Spreader Plunger Toe
14	F0178	Spreader Ram Toe
15	B0083	Flex head
16	F0173	Serrated saddle
17	G0021	Blow molded case with wheels
N.W. 36.5KG G.W. 37.5KG CUFT. 2.6'		

SHOP PRESSES 20-30 TON MODEL : SP SERIES

FEATURES

- Rugged steel frame provides maximum firmness to prevent bending.
- Multiple working position for press bed.
- Steel cross support prevent the frame from bending while loading.
- Single-acting and spring return cylinders with 5" & 8" stroke is horizontal movement on head channel.

SP2201

BP201

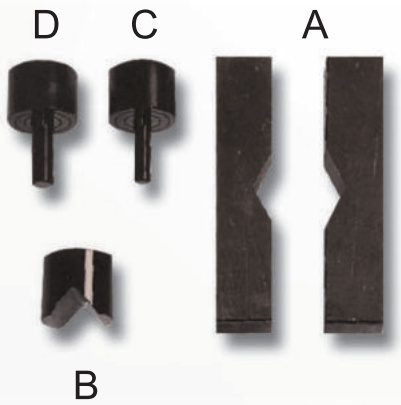

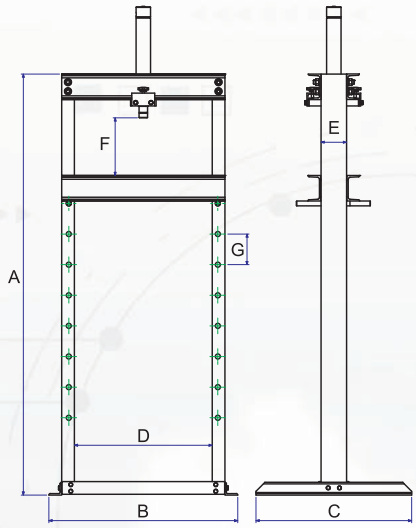

ACCESSORY SET

PART NO. / ITEM	A	B	C	D	WEIGHT (KGS)
	LONG V-BLOCK	V BASE	RAM PUSHING ADAPTER	RAM PUSHING ADAPTER	
BP102	E0662	E0064	B0562 (3/4" SHANK)	B0563 (1" SHANK)	17.0

SPECIFICATIONS

MODEL NO.	CAPACITY (TON)	STROKE (MM)	PUMP MODEL	A (MM)	B (MM)	C (MM)	D (MM)	E (MM)	F (MM)	G (MM)	WEIGHT (KGS)
SP2101	20	128	HB700	1650	790	700	510	125	233-1072	120	183
SP2201	20	128	PTS900A	1650	790	700	510	125	233-1072	120	186
SP3101	30	204	HC1500	1631	920	700	620	150	306-1025	120	244
SP3201	30	204	PTS900A	1631	920	700	620	150	306-1025	120	249

MANUFACTURING BEVELING MACHINE

OD-MOUNTED MODEL : OCE, OCP, OCH

FEATURES

Lower axial and radial clearance,light weight suitable for working at narrow and complicatedsite Can separate to two half, it's easy for the pipe when two end not open. The machines do the cutting and beveling simultaneously. The tool not only can process carbon steel, stainless steel and alloy pipe with U, V welding seam but also canprocess convex flange welded.

APPLICATION RANGE

They are widely used in the fields of petroleum, chemical, natural gas,power supply construction, boiler and nuclear power,such as the project of west gas transporting to east China.

DRIVING TYPE

- Electric-OCE
- Pneumatic-OCP
- Hydraulic-OCH
- Numerical Controller-OCS
- Power Supply : 380V 3PH 50/60HZ 10MPa@25L/Min
- Powerfuldrive, High efficiency Stable Performance Low noise Adjustable speed Ideal for heavy wall & large size pipe. (Non-standard voltage can be customized)

MAIN PERFORMANCE OF PNEUMATIC PRODUCTS

- Power Supply:0.8-1.0MPa@1000-2000L/min
- Explosion Proof
- Stable Performance
- Simple structure makes easy to maintenance
- Occasionally overload won't bum

OCH(HYDRAULIC)

OCE(ELECTRIC)

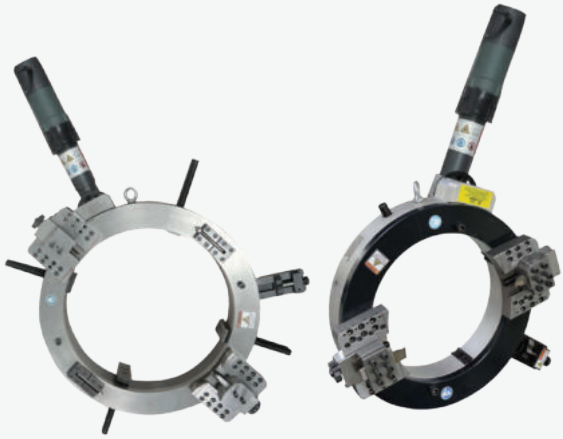

OCP(PNEUMATIC)

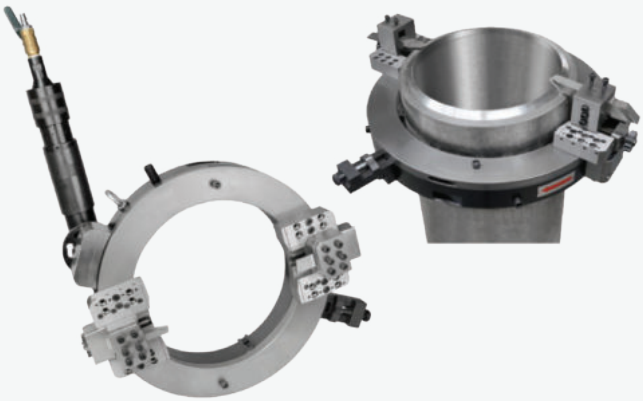

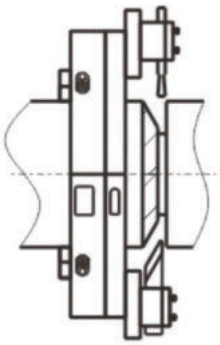

A Cutting & Beveling (RH)

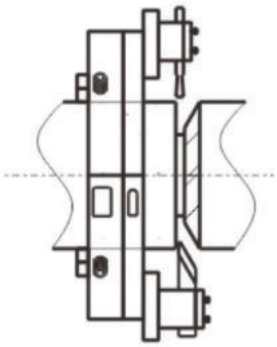

B Cutting & Beveling(LH)

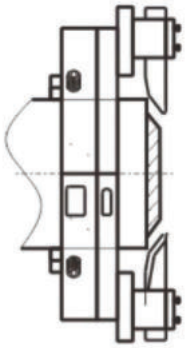

C 37.5 & 10 Deg. Compound Beveling

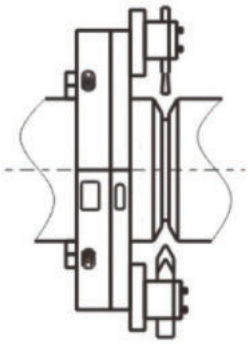

D Double V Beveling

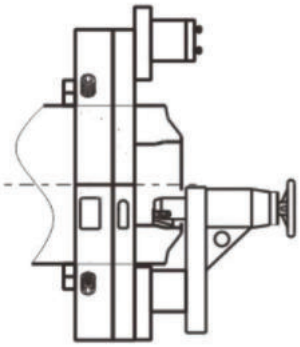

E Counter Boring

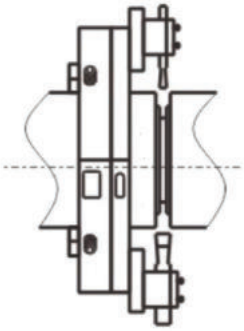

F Cold Cutting

MODEL NO.	SPEC	CAPACITY (OD MM)		WALL THICKNESS		ROTATION SPEED
		(MM)	OD (INCH)	STANDARD	HEAVY-DUTY	
	89	Φ 25-89	1"-3"	≤30	-	42r/min
	159	Φ 50-159	2"-5"	≤30	-	20r/min
	168	Φ 50-168	2"-6"	≤30	-	18r/min
	230	Φ 80-230	3"-8"	≤30	-	15r/min
	275	Φ 125-275	5"-10"	≤30	-	14r/min
	305	Φ 150-305	6"-10"	≤30	≤110	13r/min
OCE,	325	Φ 168-325	6"-12"	≤30	≤110	13r/min
	377	Φ 219-377	8"-14"	≤30	≤110	12r/min
OCP,	426	Φ 273-426	10"-16"	≤30	≤110	12r/min
	457	Φ 300-457	12"-18"	≤30	≤110	12r/min
OCH,	508	Φ 355-508	14"-20"	≤30	≤110	12r/min
	560	Φ 400-560	16"-22"	≤30	≤110	12r/min
OCS,	610	Φ 457-610	18"-24"	≤30	≤110	11r/min
	630	Φ 480-630	20"-24"	≤30	≤110	11r/min
OCM	660	Φ 508-660	20"-26"	≤30	≤110	11r/min
	715	Φ 560-715	22"-28"	≤30	≤110	11r/min
	762	Φ 600-762	24"-30"	≤30	≤110	11r/min
	830	Φ 660-813	26"-32"	≤30	≤110	10r/min
	914	Φ 762-914	30"-36"	≤30	≤110	10r/min
	1066	Φ 914-1066	36"-42"	≤30	≤110	10r/min
	1230	Φ 1066-1230	42"-48"	≤30	≤110	10r/min
	1430	Φ 1230-1430	48"-56"	≤30	≤110	8r/min

MOUNTED PIPE CUTTING AND BEVELING MACHINE CHUCK TYPE SELF-CENTERING MODEL : SOCE, SOCP

Adopt high strength & precision split frame ring structure, apply for cut and bevel work for different pipe, especially for batch working of cutting and beveling, get the high efficiency. Various of driven options: pneumatic, electric or hydraulic.

FEATURES

- Self-centering, no need adjust the concentricity & perpendicularity manually. Four clamp install synchronously and high effect.
- New clamping type, save the step of replace expending block.
- Adopt new synchronous feeding mechanism, feeding uniformity, tool bits has longer working life.
- Easy set-up, operation and maintain.
- Cutting & beveling finished at same time, high working effective.
- Cold working, no spark, won't make the material affected.
- Perfect working precision, no burrs.
- Well-adapted, install split, you can make the speed adjust depend on the working conditions.

SOCE

SOCP

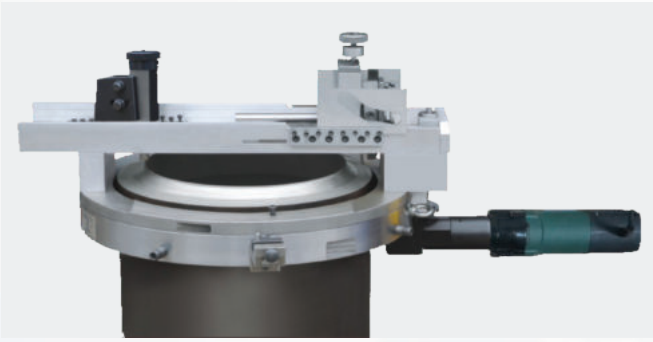

MODEL NO.	SPEC	CAPACITY (OD MM)		WALL THICKNESS (MM)	ROTATION SPEED
		(MM)	OD (INCH)		
SOCE, SOCP, SOCH, SOCM	168	Φ 50-168	2"-6"	≤30	18r/min
	230	Φ 80-230	3"-8"	≤30	15r/min
	275	Φ 125-275	5"-10"	≤30	14r/min
	305	Φ 150-305	6"-10"	≤30	13r/min
	325	Φ 168-325	6"-12"	≤30	13r/min
	377	Φ 219-377	8"-14"	≤30	12r/min
	426	Φ 273-426	10"-16"	≤30	12r/min
	457	Φ 300-457	12"-18"	≤30	12r/min
	508	Φ 355-508	14"-20"	≤30	12r/min
	610	Φ 457-610	18"-24"	≤30	12r/min

PORTABLE MULTI-FUNCTION LINE BORING MACHINE

The Line Boring is a high-efficiency series of machine tools. It is special equipment for processing deep holes in cylinders and hydraulic cylinders. This machine is equipped with a rotating structure design and automatic feeding device with high precision. The machine is widely used in the processing and repair of excavators, loaders, crawler cranes and large marine cranes.

FEATURES

- Alloy Steel Body, Compact structure, Light weight, easy to carry out.
- Small working radius, it can be adapted to variety of the narrow space, high-altitude complex processing needs.
- Boring bar is made of high-intensity alloy steel, high strength
- Can selected different connect head,can achieve different processing. For example, pipe face processing, flanges face processing , bore weld etc.

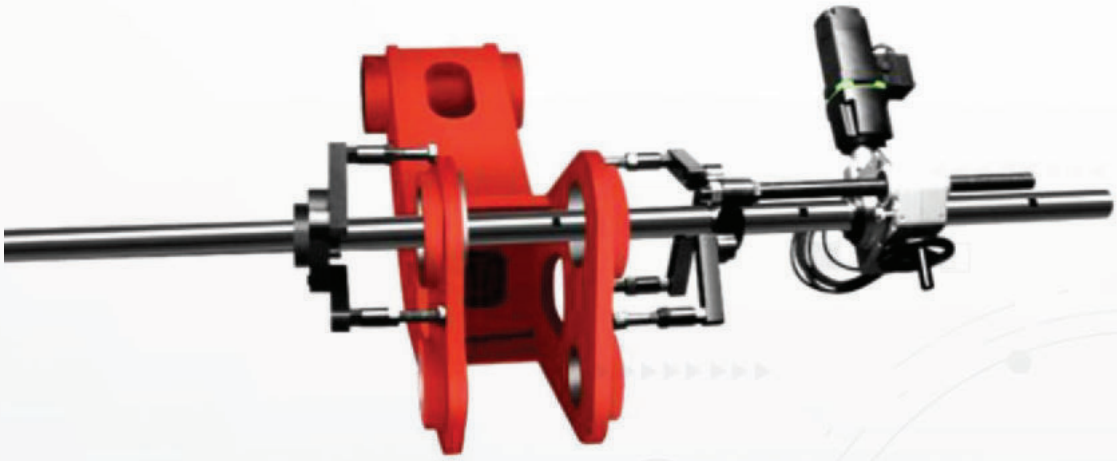

MODEL NO.	SPEC	(MM)	OD (INCH)	ROTATION SPEED
LBE	50	55-400 mm	0-118r/min	2500/3000/3500/4000/4500 mm
	60	65-600 mm	0-118r/min	
	90	100-800 mm	0-78r/min	
LBH	110	180-900 mm	0-62r/min	
	150	220-1000 mm	0-55r/min	
LBS	200	380-1200 mm	0-38 r/min	
	300	460-1600 mm	0-28 r/min	

Note : Non-Standard machines are available according to customer's requirement.

HEAVY DUTY HYDRAULIC CYLINDER

HYDRAULIC CYLINDER LOCK NUT WITH TILT SADDLE, SINGLE ACTING MODEL PSLT SERIES

Capacity : 60-800 Tons
Stroke : 50, 75 mm.
Max. Operating Pressure : 700bar/10,000psi

FEATURES

- PSLT Series flat lock nut cylinders have an extremely low height for use in confined areas.
- Lock nut for positive and safe mechanical load holding over a long period of time.
- Single-acting, load return,non-stop ring design.
- Overflow port functions as a stroke limiter.
- Interchangeable, hardened grooved tilt saddles are standard
- Special synthetic coating on external surface and plated chrome pistons provide superior corrosion resistance.
- C8F coupler and dustcap included on all models.
- Customized capacity and strokes available.

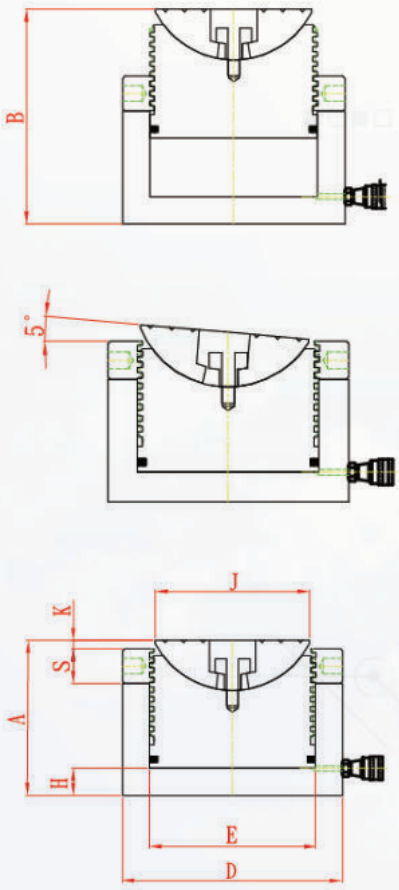

MODEL NO.	CAPACITY (TON/KN)	STROKE (MM)	COLLAPSED HEIGHT A (MM)
PSLT-602	60	50	135
PSLT-603		75	165
PSLT-1002	100	50	142
PSLT-1003		75	172
PSLT-1502	150	50	159
PSLT-1503		75	189
PSLT-2002	200	50	165
PSLT-2003		75	195
PSLT-2502	250	50	171
PSLT-2503		75	201
PSLT-3002	300	50	179
PSLT-3003		75	209
PSLT-4002	400	50	193
PSLT-4003		75	226
PSLT-5002	500	50	211
PSLT-5003		75	241
PSLT-6002	600	50	222
PSLT-6003		75	257
PSLT-8002	800	50	255
PSLT-8003		75	285

HYDRAULIC CYLINDER DOUBLE ACTING WITH TILT SADDLE MODEL : DCT SERIES

Capacity : 50-1,500 Tons
Stroke : 50-500 mm.
Max. Operating Pressure : 700bar/10,000psi

FEATURES

- DCT Series high tonnage double acting hydraulic cylinders are designed specifically for heavy lifting up to 1,500 tons.
- Double-acting, for positive retraction.
- Integral stop ring provides piston blow-out protection.
- Interchangeable, hardened grooved tilt saddles are standard.
- Built-in safety valve prevents accidental over-pressurization.
- Plunger wiper reduces contamination, extending cylinder lifen.
- Special synthetic coating on external surface and plated chrome pistons provide superior corrosion resistance.
- C8F coupler and dustcap included on all models.
- Customized capacity and strokes available.

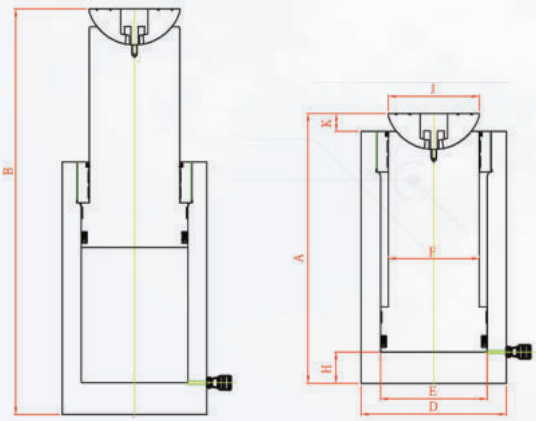

MODEL NO.	CAPACITY (TON/KN)	STROKE (MM)	COLLAPSED HEIGHT A (MM)
DCT-502	50	50	168
DCT-506		150	268
DCT-5012		300	453
DCT-5020		500	710
DCT-1002	100	50	178
DCT-1006		150	283
DCT-10012		300	473
DCT-10020		500	743
DCT-1502	150	50	203
DCT-1506		150	308
DCT-15012		300	518
DCT-15020		500	753
DCL-2002	200	50	203
DCT-2006		150	308
DCT-20012		300	523
DCT-20020		500	763
DCT-2502	250	50	218
DCT-2506		150	318
DCT-25012		300	528
DCT-25020		500	868
DCT-3002	300	50	238
DCT-3006		150	373
DCT-30012		300	563
DCT-30020		500	923
DCT-4002	400	50	263
DCT-4006		150	383
DCT-40012		300	608
DCT-40020		500	933
DCT-5002	500	50	300
DCT-5006		150	400
DCT-50012		300	655
DCT-50020		500	950
DCT-6002	600	50	320
DCT-6006		150	420
DCT-60012		300	660
DCT-60020		500	955
DCT-8002	800	50	345
DCT-8006		150	445
DCT_80012		300	675
DCT-80020		500	970
DCT-10002	1000	50	390
DCT-10006		150	490
DCT-100012		300	690
DCT-100020		500	995
DCT-12002	1200	50	430
DCT-12006		150	530
DCT-120012		300	730
DCT-120020		500	1040
DCT-15002	1500	50	470
DCT-15006		150	570
DCT-150012		300	750
DCT-150020		500	1060

STRAND JACKING SYSTEM

Strand Jacking System are the choice for clients seeking precise synchronous control with heavy lifting capacity in an economical, compact, and reliable foot print.

FEATURES

- Automated locking - unlocking operation.
- Strand Preloading System.
- Two strand sizes: 0.62 in (15. 7 mm) and 0.71 in (18 mm).
- Telescopic strand guide pipes prevent bird caging.
- Lifting anchor are included with all strand jacks.
- Lifting/Pulling Speed 4, 6, 8 10m/hr (Able to custom to project requirement).

PART NUMBER	CAPACITY (TON)	STROKE (MM)
HSJ-030500	30	500
HSJ-045500	45	500
HSJ-060500	60	500
HSJ-100500	100	500
HSJ-180500	180	500
HSJ-200500	200	500
HSJ-300500	300	500
HSJ-500500	500	500
HSJ-650500	650	500
HSJ-850500	850	500
HSJ-1000500	1000	500
HSJ-1250500	1250	500

MORE ENQUIRIES,
PLEASE CONTACT US AT

AFTER MARKET SOLUTION

We are the professional team in Asset Management and After Market Solution for our services specialize in used machine and rental business, including selling and leasing to customers especially for Material Handling Equipment such as forklifts trucks, stackers, warehouse equipments and etc. For After Market solutions, despite any brands, our spare parts can suit your needs. Our commitment to total customer satisfaction extends without boundaries. We are ready to provide customer the various aspects of services.

- Spare Parts: O.E.M and Replacement Parts (Forklift, MEWP, Heavy Duty Machine)
- Oil and Lubricants
- Tires (Solid, Pneumatic and OTR)
- Fork and Attachment
- Warehouse Products and Material Handling Equipment such as Hand Pallet, Power Pallet, Stackers etc.
- Battery Solution : Traction Battery, Deep Cycle Battery etc.

BATTERY SOLUTION

TRACTION BATTERY

Traction batteries are used in major electric vehicles such as forklifts. There are several brands of traction batteries which ensure a higher level of performance and longer life capacity. We guarantee to customer that we can provide more benefits in order to save our customer investment. Our products are made to suit the demands of your requirements, offering great values with sustainable reliability.

DEEP CYCLE BATTERY

Deep Cycle Batteries are one of the longest lasting in the industry! Deep Cycle Batteries come in 6V, 8V and 12V blocks of various capacities and are widely used in Golf Buggies, Electric Vehicles, Cleaning Machines, Scissors Lifts and Material Handling Equipment.

ROCKET TRACTION BATTERY

BATTERY FOR COUNTERBALANCED FORKLIFT

BRAND	TYPICAL MODEL	TONNAGE	BATTERY TYPE	AH	VOLTAGE
Mitsubishi	FB15CA	1.5T	VCD400	400	48
	FB20CA	2.0T	VCD450	450	48
	FB25CA	2.5T	VCD500-580	500-580	48
	FB30CA	3.0T	VCD450	450	72
	FB15CB	1.5T	VCI440	440	48
	FB20CB	2.0T	85TX-13	572	48
	FB25CB	2.5T	85TX-13	572	48
Nissan	FP01L15U	1.5T	VCD450	450	48
	QP02L20U	2.0T	VCD500-580	500-580	48
	QP02L25U	2.5T	VCD500-580	500-580	48
	P1B2L20U	2.0T	VCD500-580	500-580	48
	P1B2L25U	2..5T	VCD500-580	500-580	48

BRAND	TYPICAL MODEL	TONNAGE	BATTERY TYPE	AH	VOLTAGE
Nichiyu	FB10-15PN	1.0-1.5T	VCD400	400	48
	FB20PN	2.0T	VCD450	450	48
	FB25PN	2.5T	VCD500-580	500-580	48
	FB30PN	3.0T	VCD450	450	72
TCM	FBL15	1.5T	VCD400	400	48
	FB15H4	1.5T	VCD500	500	48
	FBL20-25	2.0-2.5T	VCD500-580	500-580	48
	FB30-6	3.0T	VCD450	450	72
	FB30-5	3.0T	VCE715	715	48

Other : SHINKO, HYSTER, HYUNDAI, JUMBO, LINDE, CRACK, DAEWOO, SUMITOMO, YALE, CROWN, BT contact sales representative for more detail.

ROCKET TRACTION BATTERY

BRAND	TYPICAL MODEL	TONNAGE	BATTERY TYPE	AH	VOLTAGE
Komatsu	FB10EX-7	1.0T	VCD400	400	48
	FB15EX-5,7	1.5T	VCD400-450	400-450	48
	FB15A-12	1.5T	VCI525	525	48
	FB20EX-8	2.0T	VCD500-580	500-580	48
	FB20A-12	2.0T	VCI525	525	48
	FB25-3	2.5T	VCD500-580	500-580	48

BRAND	TYPICAL MODEL	TONNAGE	BATTERY TYPE	AH	VOLTAGE
Toyota	FB10-14	1.0-1.4T	VCD400	400	48
	FB15-18	1.5-1.8T	VCD400-450-460	400-450-460	48
	FB20-25	2.0-2.5T	VCD500-580	500-580	48
	FB30	3.0T	VCDH580	580	72
	7FBE10-18	1.0-1.8T	VCF400	400	48
	7FBE20	2.5T	VCF400	400	48
	7FB30-35	3.0T	VCF400	400	80
	8FBN20	2.0T	VCI440-VCI525	400-525	48

Other : SHINKO, HYSTER, HYUNDAI, JUMBO, LINDE, CRACK, DAEWOO, SUMITOMO, YALE, CROWN, BT contact sales representative for more detail.

ROCKET TRACTION BATTERY

BATTERY FOR REACH TRUCK

BRAND	TYPICAL MODEL	TONNAGE	BATTERY TYPE	AH	VOLTAGE
Mitsubishi	RBS10CA/CB	1.0T	VCF400	400	24
	RBS15-18CA/CB	1.5-1.8T	VCF280	280	48
	RBS20-25CA/CB	2.0-2.5T	VCI335,VCF335	335	48
	RBS30CA/CB	3.0T	VCI365	365	48
	FBR10	1.0T	VCF400	400	24
	FBR15	1.5T	VCF280	280	48
	FBR20	2.0T	VCI365	365	48
Nissan	HC01L15HU	1.5T	VCF280	280	48
	YU01L15TU	1.5T	VCF280	280	48
	JHC01L15HU	1.5T	4PzS420,VCJ4	420-400	48
	JHC01L18CU	1.8T	4PzS420,VCJ4	420-400	48
	YU02L20-25U	2.0T	VCI335	335	48
	YU02L30U	3.0T	VCI365	365	48

BRAND	TYPICAL MODEL	TONNAGE	BATTERY TYPE	AH	VOLTAGE
Nichiyu	FBR10-13	1.0-1.3T	VCF400	400	24
	FRB15-18	1.5-1.8T	VCF280	280	48
	FRB20-25	2.0-2.5T	VCI335,VCF335	335	48
	FRB30	3.0T	VCI365	365	48
TCM	FRHB15A4	1.5T	VCF280	280	48
	FRHB20-8	2.0T	VCF335,VCI365	335-365	48
Komatsu	FB10-13R	1.0-1.3T	VCF198,VCI225	198-225	48
	FB14-18R	1.4-1.8T	VCF280	280	48
	FB20-25R	2.0-2.5T	VCI365,VCF400	365-400	48
Toyota	FBR10-13	1.0-1.3T	VCF198,VCI225	198-225	48
	FBR15-18	1.5-1.8T	VCF280,VCI335	280-335	48
	FBR20-30	2.0-3.0T	VCI440	440	48
	7FBR20	2.0T	VCF335,350,400	335-350-400	48
	7FBR25-30	2.5-3.0T	VCF350,400,VCI440	350-400-440	48

Other : SHINKO, HYSTER, HYUNDAI, JUMBO, LINDE, CRACK, DAEWOO, SUMITOMO, YALE, CROWN, BT contact sales representative for more detail.

ROCKET TRACTION BATTERY

BATTERY FOR POWER PALLET AND STACKER

BRAND	TYPICAL MODEL	TONNAGE	BATTERY TYPE	AH	VOLTAGE
Mitsubishi	SBP16N2	1.6T	2PzS250	250	24
	PBP20N2R	2.0T	2PzS250	250	24
Nichiyu	NTT100	1.0T	VCD210-VCD250	210-250	24
Komatsu	MPF10	1.0T	VCF400,350,VCI335	400-350-335	24
Toyota	4CBTY2	2.0T	VCD170	170	48

Other : SHINKO, HYSTER, HYUNDAI, JUMBO, LINDE, CRACK, DAEWOO, SUMITOMO, YALE, CROWN, BT contact sales representative for more detail.

TSB TRACTION BATTERY

BATTERY FOR COUNTERBALANCED FORKLIFT

BRAND	TYPICAL MODEL	TONNAGE	BATTERY TYPE	AH	VOLTAGE
Mitsubishi	FB15CA	1.5T	VDP8AC	435	48
	FB20CA	2.0T	VDP9AC	475	48
	FB25CA	2.5T	VDP10AC-VDHP600	540-600	48
	FB30CA	3.0T	VDP9AC	475	72
	FB15CB	1.5T	VIP470	470	48
	FB20CB	2.0T	VIP580	580	48
	FB25CB	2.5T	VIP580	580	48
Nissan	FP01L15U	1.5T	VDP9AC	475	48
	QP02L20U	2.0T	VDP10AC-VDHP600	540-600	48
	QP02L25U	2.5T	VDP10AC-VDHP600	540-600	48
	P1B2L20U	2.0T	VDP10AC-VDHP600	540-600	48
	P1B2L25U	2..5T	VDP10AC-VDHP600	540-600	48

BRAND	TYPICAL MODEL	TONNAGE	BATTERY TYPE	AH	VOLTAGE
Nichiyu	FB10-15PN	1.0-1.5T	VDP8AC	435	48
	FB20PN	2.0T	VDP9AC	475	48
	FB25PN	2.5T	VDP10AC-VDHP600	540-600	48
	FB30PN	3.0T	VDP9AC	475	72
TCM	FBL15	1.5T	VDP8AC	435	48
	FB15H4	1.5T	VDP10AC	540	48
	FBL20-25	2.0-2.5T	VDP10AC-VDHP600	540-600	48
	FB30-6	3.0T	VDP9AC	475	72
	FB30-5	3.0T	VFP10	720	48

Other : SHINKO, HYSTER, HYUNDAI, JUMBO, LINDE, CRACK, DAEWOO, SUMITOMO, YALE, CROWN, BT contact sales representative for more detail.

TSB TRACTION BATTERY

BATTERY FOR COUNTERBALANCED FORKLIFT

BRAND	TYPICAL MODEL	TONNAGE	BATTERY TYPE	AH	VOLTAGE
Komatsu	FB10EX-7	1.0T	VDP8AC	435	48
	FB15EX-5,7	1.5T	VDP8AC-VDP9AC	435-475	48
	FB15A-12	1.5T	VDP8AC-VDP9AC	435-475	48
	FB20EX-8	2.0T	VDP10AC-VDHP600	540-600	48
	FB20A-12	2.0T	VIP555	555	48
	FB25-3	2.5T	VDP10AC-VDHP600	540-600	48

BRAND	TYPICAL MODEL	TONNAGE	BATTERY TYPE	AH	VOLTAGE
Toyota	FB10-14	1.0-1.4T	VDP8AC	435	48
	FB15-18	1.5-1.8T	VDP8AC-VDP9AC-VDHP485	435-475-485	48
	FB20-25	2.0-2.5T	VDP10AC-VDHP600	540-600	48
	FB30	3.0T	VDHP600	600	72
	7FBE10-18	1.0-1.8T	VFP400	400	48
	7FBE20	2.5T	VFP400	400	48
	7FB30-35	3.0T	VFP400	400	80
	8FBN20	2.0T	VIP470-VIP555	470-555	48

BATTERY FOR REACH TRUCK

BRAND	TYPICAL MODEL	TONNAGE	BATTERY TYPE	AH	VOLTAGE
Toyota	RBS10CA/CB	1.0T	VFP400	400	24
	RBS15-18CA/CB	1.5-1.8T	VFP4	290	48
	RBS20-25CA/CB	2.0-2.5T	VFP5A	350	48
	RBS30CA/CB	3.0T	VIP390	390	48
	FBR10	1.0T	VFP400	400	24
	FBR15	1.5T	VFP4	290	48
	FBR20	2.0T	VIP390	390	48
Nissan	HC01L15HU	1.5T	VFP4	290	48
	YU01L15TU	1.5T	VFP4	290	48
	JHC01L15HU	1.5T	VHP4A	420	48
	JHC01L18CU	1.8T	VHP4A	420	48
	YU02L20-25U	2.0T	VFP5A	350	48
	YU02L30U	3.0T	VIP390	390	48

BRAND	TYPICAL MODEL	TONNAGE	BATTERY TYPE	AH	VOLTAGE
Nichiyu	FBR10-13	1.0-1.3T	VFP400	400	24
	FRB15-18	1.5-1.8T	VFP4	290	48
	FRB20-25	2.0-2.5T	VFP5A	350	48
	FRB30	3.0T	VIP390	390	48
TCM	FRHB15A4	1.5T	VFP4	290	48
	FRHB20-8	2.0T	VFP5A-VIP390	350-390	48
Komatsu	FB10-13R	1.0-1.3T	VFP3A-VIP3A	210-240	48
	FB14-18R	1.4-1.8T	VFP4	290	48
	FB20-25R	2.0-2.5T	VFP400	400	48
Toyota	FBR10-13	1.0-1.3T	VFP3A-VIP3A	210-240	48
	FBR15-18	1.5-1.8T	VFP4-VFP5A	290-350	48
	FBR20-30	2.0-3.0T	VIP470	470	48
	7FBR20	2.0T	VFP5A-VFP400	350-400	48
	7FBR25-30	2.5-3.0T	VFP5A-VFP400-VIP470	350-400-470	48

Other : SHINKO, HYSTER, HYUNDAI, JUMBO, LINDE, CRACK, DAEWOO, SUMITOMO, YALE, CROWN, BT contact sales representative for more detail.

TSB TRACTION BATTERY

BATTERY FOR POWER PALLET AND STACKER

BRAND	TYPICAL MODEL	TONNAGE	BATTERY TYPE	AH	VOLTAGE
Nichiyu	NTT100	1.0T	VDP4B-VDP5A	225-265	24
Komatsu	MPF10	1.0T	VFP400-VFP5A	400-350	24
Toyota	4CBTY2		VDP3A	170	48

Other : SHINKO, HYSTER, HYUNDAI, JUMBO, LINDE, CRACK, DAEWOO, SUMITOMO, YALE, CROWN, BT contact sales representative for more detail.

ROCKET

LONGEST EDITION

GENUINE DEEP CYCLE BATTERY

APPLICATIONS

Aerial Work Platform

Golf Cart

Ride-on Scrubber

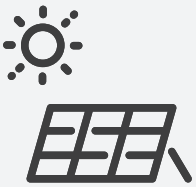
Solar Power

CAP OPTIONS

Gang Cap

Individual Caps

SPW Caps

*SPW : Single Point Watering System

TYPE	MODEL	VOLTAGE	5 HR RATE AH	20 HR RATE AH	DIMENSIONS (MM)			CAPACITY		TERMINAL	WEIGHT (KG)	FOR GOLF CAR 1 UNIT
					L	W	H	@25 AMPS	@75 AMPS			
Deep Cycle Battery	L-105	6 V	185	225	259	179	245/278	447	115	EHPT,EAPT	28	8 Pcs.
Deep Cycle Battery	L-875	8 V	145	170	262	181	245/278	295	75	EHPT,EAPT	28	6 Pcs.
Deep Cycle Battery	L-1275	12 V	120	150	329	181	245/278	280	70	EHPT,EAPT	38	4 Pcs.

TSB STARTER BATTERY

BRAND	MODEL	VOLTAGE	DIMENSIONS (MM)			WEIGHT (KG)	TERMINAL DIRECTION	FOR FORKLIFT	FOR CAR
			L	W	H				
TSB	NS60L	45	236	127	200/222	7.7	B	FG10-35	Toyota Vios, Honda C/H-RV, Civic, Nissan Almera
TSB	NX120-7L	85	303	170	201/224	4.6	A	FD10-35	MITSUBISHI PAJERO SPORT 2.5, TRITON 2.4, 2.5, 3.2

COMMODITIES

ENGINE OIL GOLD

GIVE YOU PEACE OF MIND

Mitsubishi Forklift GOLD CI-4/SL engine oil operates under extreme service conditions and maintains proper viscosity. It is designed to give extra protection and keeps engine clean for a longer period. Mitsubishi Forklift GOLD CI-4/SL is specially formulated to resists wear, extreme pressure and excessive temperature.

PART NUMBER	DESCRIPTION	REMARKS
A990021210	Engine Oil Cl-4 Gold 15w-40	6 x 4L Pack
A990021200	Engine Oil Cl-4 Gold 15w-40	6 x 5L Pack
A990021220	Engine Oil Cl-4 Gold 15w-40	18L Bottle
A990021230	Engine Oil Cl-4 Gold 15w-40	200L Drum

PREMIUM ATF

EXCELLENT PERFOR MANCE OUTSTANDING PROTECTION

Mitsubishi Forklift Trucks Premium ATF transmission oil formulated to meet the viscosity and frictional requirements for positive clutch pack engagement. It provides superior wear protection for all range of trucks which can contribute to long transmission life.

PART NUMBER	DESCRIPTION	REMARKS
A990023550	ATF Dlll Transmission Oil	6 x 5L Pack
A990023500	ATF Dlll Transmission Oil	18L Bottle
A990023510	ATF Dlll Transmission Oil	200L Drum

HYDRAULIC OIL AW32

Hydraulic Oil AW32 is a premium quality anti-wear hydraulic oil which is formulated with premium low zinc additives, possesses excellent oxidation stability, anti-wear, anti-corrosion and anti-foam properties.

PART NUMBER	DESCRIPTION	REMARKS
A990023000	Hydraulic Oil AW32	18L Bottle
A990023010	Hydraulic Oil AW32	200L Drum

SIDESHIFTER

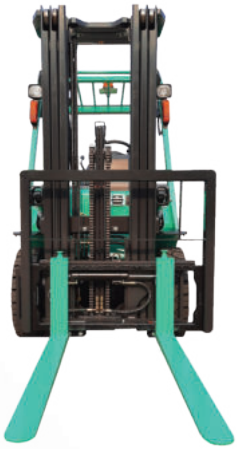

PART NUMBER	DESCRIPTION
A990021650	S / S Assy, 2.0 - 2.5 ton
A990021660	S / S Assy, 3.0 ton
A990021670	S / S Assy, 3.0 ton

UNIVERSAL SEAT

- Adjustable backrest fore & aft 45 degrees.
- Sliding adjustment of 150mm
- Retractable safety seat belt
- Document bag
- Mechanical suspension integrated in cushion
- Universal mounting

PART NUMBER	DESCRIPTION	REMARKS
9051400050	SEAT ASSY, Suspension, BF5-3	Suitable for other brands forklift except MIT
A990058010	SEAT ASSY, Suspension, BF2-3	Compatible with most MIT forklift models

HIGH VISIBILITY SEAT BELT

- Clear visual cue on seat belt usage.
- Bright orange colour seat belt strap stand out against background.
- Fits most forklift trucks seat assembly.

PART NUMBER	DESCRIPTION
A990058110	High Visibility Seat Belt

LOCKABLE FUEL CAP

- Anti-theft device
- Locking fuel cap with keys
- Fits most lower-to-mid capacity forklift models*

*higher capacity forklifts may have different fuel inlet and will not fit.

PART NUMBER	DESCRIPTION
A990036025	Lockable Fuel Cap

HAND PALLET TRUCK

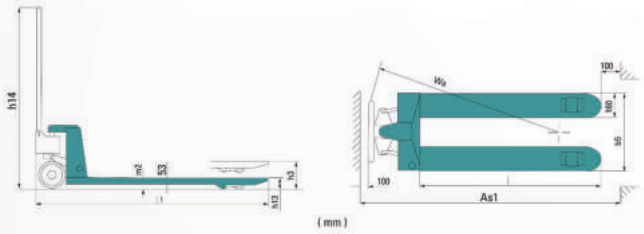

PART NUMBER	DESCRIPTION	FORK LENGTH & CAPACITY
A990070000	HPT, Tandem Load Wheel	685 x 1220 mm, 2.5 ton
A990070500	HPT, Tandem Load Wheel	520 x 1220 mm, 2.5 ton
A400001662	HPT, Single Load Wheel	685 x 1220 mm, 2.5 ton
A400002276	HPT, Single Load Wheel	520 x 1220 mm, 2.5 ton
A990070030	HPT, Tandem Roller - 3T	685 x 1220 mm, 3.0 ton

- Ergonnomic rubber wrapped handle for comfortable operation.
- 3 positions of hand control - Raise, Lower and Neutral.
- Polyurethane steer wheels and load rollers.
- 210° steering arc and small turning radius.
- Adjustable pump cap ensuring long service life.
- Equipped with overload valve for long serving time.
- Entry / exit roller system for easy travel.
- Fork lowering speed is controllable, operated by hand control and foot pedal.
- 12 lubrication grease nipples on all moveable pairs for easy maintenance.

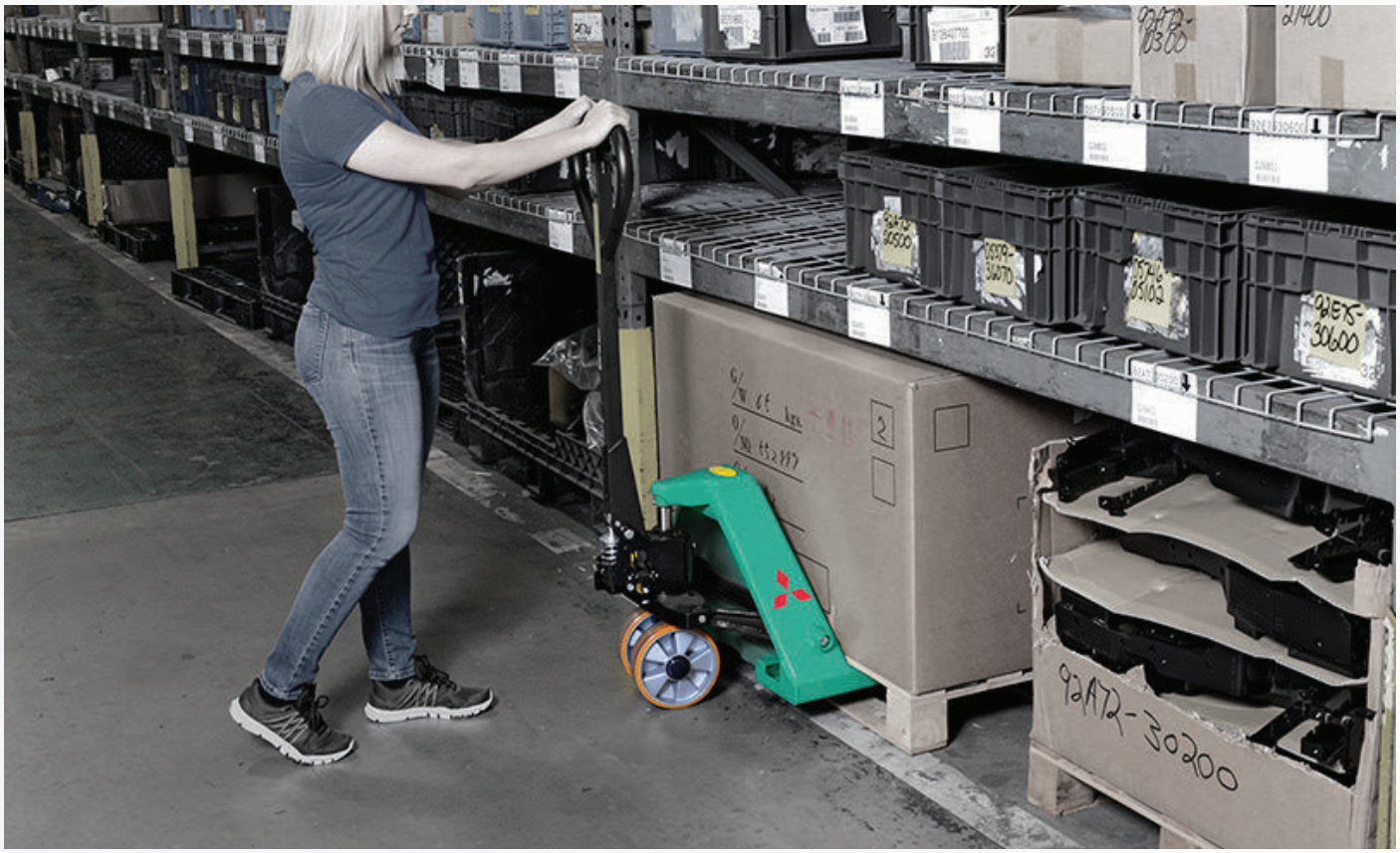

FORKS

PART NUMBER	DESCRIPTION	REMARKS
A990016300	FORK, 100 x 35 x 1070	Class IIA 1 ~ 1.8 ton @ 500 mm LC
A990016320	FORK, 100 x 35 x 1220	
A990016010	FORK, 100 x 45 x 1070	Class IIA 2 ~ 2.5 ton @ 500 mm LC
A990016030	FORK, 100 x 45 x 1220	
A990016040	FORK, 100 x 45 x 1370	
A990016050	FORK, 100 x 45 x 1520	
A990016070	FORK, 122 x 45 x 1830	
A990016500	FORK, 122 x 40 x 1070	
A990016520	FORK, 122 x 40 x 1220	
A990016530	FORK, 122 x 40 x 1370	
A990016540	FORK, 100 x 45 x 1520	
A990016100	FORK, 122 x 45 x 1070	Class IIIA 3 ~ 3.5 ton @ 500 mm LC
A990016120	FORK, 122 x 45 x 1220	
A990016130	FORK, 122 x 45 x 1370	
A990016140	FORK, 122 x 45 x 1520	
A990016160	FORK, 122 x 50 x 1830	
A990016170	FORK, 122 x 50 x 2134	
A990016220	FORK, 150 x 50 x 1120	Class IIIA 4 ~ 5 ton @ 500 mm LC
A990016230	FORK, 150 x 50 x 1370	
A990016240	FORK, 150 x 50 x 1520	
A990016260	FORK, 150 x 50 x 1830	
A990016420	FORK, 150 x 60 x 1120	Class IVA 5 ~ 8 ton @ 500 mm LC
A990016430	FORK, 150 x 65 x 1370	
A990016440	FORK, 150 x 65 x 1520	
A990016460	FORK, 150 x 65 x 1830	
A990016470	FORK, 150 x 65 x 2134	
A990016480	FORK, 150 x 65 x 2438	

- Made from high quality steel
- Excellent hardness and durability
- Available fork length up to 2438mm
- For Class II A to Class IVA forklift trucks

FORKLIFT ENHANCEMENT DEVICES

LED BULBS

PART NUMBER	DESCRIPTION
A990002000	Bulb, Set LED 12V
A990002010	Bulb, Front LED 12V
A990002020	Bulb, Side LED 12V
A990002030	Bulb, Brake LED 12V
A990002040	Bulb, Reverse LED 12V
A990002050	Bulb, Signal LED 12V

STROBE LIGHTS AND LAMPS

PART NUMBER	DESCRIPTION	REMARKS
A990052000	Strobe LED, Amber Rectangle	
A990052010	Strobe LED, Red Rectangle	
A990052050	Strobe LED, Amber Round	With mounting bracket
A990052100	Strobe LED, Amber Round	W/O mounting bracket
A990052120	Strobe, Xenon Amber	W/O mounting bracket
A990052210	Rear Warning Light	
A990052200	Lamp, Head LED	

TRANSMISSION INTERLOCK

- Reduced Maintenance Costs
- Increase Site Safety
- Reduced expenditure and increased productivity

PART NUMBER	DESCRIPTION
A990058003	Transmission Interlock (TXP)

WEIGH SAFE

The WDU MINI SERIES is an ultra slim, weatherproof, microprocessor based digital weight indicator with a 12.5mm LED display featuring tare weight, lock and hold, accumulative weight and number of lifts. It incorporates a specially designed "DIGI-LOCK" forklift weighing software. It is easy to use and most importantly, easy to install by most technicians

- Accuracy of +/-1 to 2% of forklift truck capacity
- Less than 5 seconds to actual load to be measured
- Weight and number of lifts perform can be totalized by simple recall function

PART NUMBER	DESCRIPTION
A99005831	Load, Weigh Scale

VIEW-ON-FORKS

- View actual forks and load position overhead
- More accurate load positioning
- Improves overall material handling productivity
- 7" LED monitor display
- IP67 certified for dust and water resistance

PART NUMBER	DESCRIPTION
A990052300	View - On - Forks

EASY PALLET

COMPACT AND STRONG STEEL BOX

- Rust proofing
- Light Weight - be able to stack by hand

OUTER SIZE	INNER SIZE	WEIGHT	WEIGHT LOAD
1170 x 1150 x 737 mm.	1110 x 1090 x 635 mm.	41 kg.	800 kg.

STACKING FRAME

REDUCE TRANSPORTATION COST BY STACKING PLASTIC PALLET

- Fall Prevention
- Easy to Assemble and disassemble
- Flexible design

FLEET MANAGEMENT SOLUTION

Possessing a proper fleet management can benefit your organization with meaningful and proper fleet information, and providing stable financial future investments with an overall scope of your products using the fleet management program.

Possessing such an overall scope towards your fleet using our management system can also give you an advantage towards operation in regards of time spent and stopped. Fleet management will be able to highlight your benchmark operation requirements through the deepest details of your industry.

Our fleet management system outlines various available methods to handle the fleet operations based on your organization's mission and vision. Having a proper fleet management can ensure you to minimize the challenges of operational procedures and uncovering the full potential of your operations.

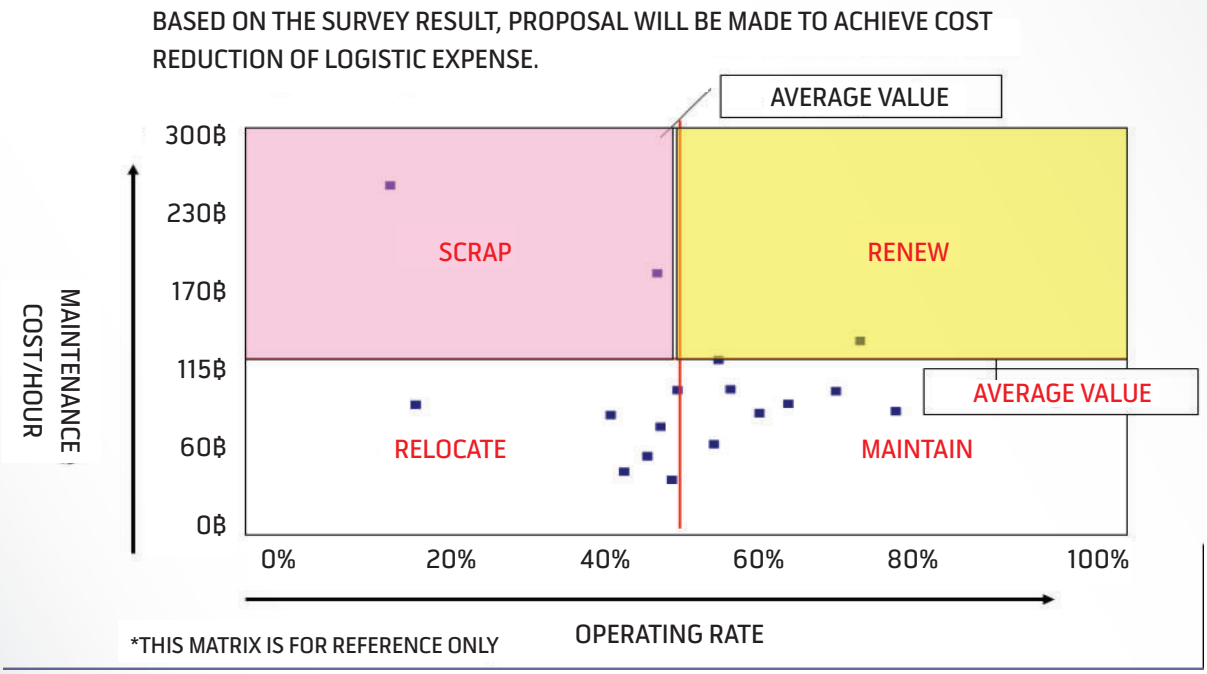

RENTAL BUSINESS

We rent forklifts, boom lifts, scissors lifts, vertical lifts from our rental fleet for short term to long term customer needs. We offer quality before delivery through system check ups by our highly experienced teams.

BENEFIT OF RENTAL EQUIPMENT

CAPITAL IS CONSERVED: renting enables you to acquire the use of equipment without capital outlay, which means no expensive upfront or loan costs with high interests.

BUDGETING: you are able to budget for the future with fixed costs every month without any unexpected maintenance costs arising.

UNFORESEEN NEEDS: at unpredictable peak periods or when essential equipment breaks down or some businesses experience seasonal highs and lows, rental forklifts can provide immediate relief.

MODERNIZATION OF YOUR EQUIPMENT: renting allows you to always have the most up-to-date equipment and technology. Once your equipment ages or the end of your renting terms, your old equipment is replaced with new ones.

WE ARE AUTHORIZED DEALER of Mitsubishi forklifts and JLG aerial work platforms. You can rely on the quality of all these trucks.

If you're looking for the conveniences with efficient financing solutions, no worry about maintenance, no big investment or you want to use it at specific periods, we have the answer for you. We have flexible solutions for your service.

- Short term rental service
- Long term rental service

USED EQUIPMENT

We are responsible for the working process of the used machines to perfection, and to boost the level of performance towards the satisfaction of customers staging in genuine or O.E.M, pre and post QC Checking before delivery to customer hands.

We find a source including variety of branded machines & equipment & the used machines & equipment from our exclusive brands such as Mitsubishi Forklift, JLG AWP or any popular brands which may fulfill our customers' needs.

5 BENEFITS OF BUYING USED EQUIPMENT WITH UNITED

GENEROUS UPFRONT SAVING They are more budget-friendly. You are able to purchase a high-quality and high-performing workhorse for much less of its market value.

INCREASE YOUR BUYING POWER With the same money, you are able to buy more workhorses to improve your workforce productivity and still have the budget for minor maintenance.

EASE OF OPERATION AND FAMILIARITY You are already familiar with a used forklift and can easily take over the job without spending time and money on the training.

A WIDE RANGE OF OPTIONS AVAILABLE You will be able to shop around and compare various models until you find the forklift that has all the features and load capacity that you are looking for.

70 YEARS OF EXPERIENCE WITH A PROFESSIONAL TEAM You can fully rely on us.

MITSUBISHI USED EQUIPMENT

MODEL	FB15CA
SERIAL	221E-03057
MAST	2SP30 (3 M)
FORK	L1070
HOUR	-
YEAR	2011

MODEL	FB25CA
SERIAL	241C-02349
MAST	2SP40 (4 M)
FORK	LX
HOUR	9710
YEAR	2015

MODEL	FB30CA
SERIAL	251AC-2054
MAST	2SP30 (3 M)
FORK	L1070
HOUR	11014
YEAR	2015

MODEL	FD35NT
SERIAL	CF14E-85518
MAST	2SP40 (4 M)
FORK	Rollclamp
HOUR	10258
YEAR	2016

MODEL	FD45NT
SERIAL	CF19D-50008
MAST	2SP50 (5 M)
FORK	L1820
HOUR	-
YEAR	2013

MODEL	FD30S
SERIAL	CF51-10518
MAST	2SP30 (3 M)
FORK	L1220
HOUR	1076
YEAR	2015

MODEL	FG15NT
SERIAL	CF25C-70044
MAST	2SP30 (3 M)
FORK	L920
HOUR	9455
YEAR	2015

MODEL	FG25NT
SERIAL	CF54-50182
MAST	5V25D30-C2240
FORK	L1220
HOUR	8943.4
YEAR	2015

MODEL	FG40N
SERIAL	F40-00027
MAST	2SP40
FORK	L1220+SS
HOUR	13044
YEAR	2011

MODEL	RBS10CA
SERIAL	184E-00088
MAST	R13K400PS-68019T
FORK	L770
HOUR	4003
YEAR	2016

MODEL	RBS15CA
SERIAL	185E-00343
MAST	R15K600MS-4Y169T
FORK	L1140
HOUR	7630
YEAR	2015

MODEL	RBS30CA
SERIAL	171AE-0561
MAST	2SP40 (4 M)
FORK	L1220
HOUR	-
YEAR	2013

For more information, please contact our salesperson

JLG USED EQUIPMENT

MODEL	24RS
S/N NO.	B300000813
YEAR	2013
HRS.	190

MODEL	41AM-DC
S/N NO.	0900035351
YEAR	2014
HRS.	-

MODEL	24RS
S/N NO.	B300000782
YEAR	2013
HRS.	3184

MODEL	600AJ
S/N NO.	0300137423
YEAR	2009
HRS.	1507

MODEL	4045R
S/N NO.	B200057464
YEAR	2019
HRS.	65

MODEL	800AJ
S/N NO.	0300139212
YEAR	2010
HRS.	-

MODEL	4045R
S/N NO.	B200059778
YEAR	2019
HRS.	82

MODEL	860SJ
S/N NO.	0300118940
YEAR	2008
HRS.	7436

MODEL	4045R
S/N NO.	B200059776
YEAR	2019
HRS.	57

MODEL	860SJ
S/N NO.	0300141582
YEAR	2010
HRS.	3393

MODEL	4045R
S/N NO.	B200059777
YEAR	2019
HRS.	69

MODEL	E450AJ
S/N NO.	0300193307
YEAR	2015
HRS.	332

For more information, please contact our salesperson

The highest quality parts
for operational safety and
equipment longevity
MORE ENQUIRIES,
PLEASE CONTACT US AT

ROYAL FORKLIFT TRUCK

Established in Feb. 2010, Royal Forklift specializes in material handling equipment design and manufacture.

Royal Forklift current product range covers 4 series, include 1T-12T industry forklift, 2.5T-5T rough terrain forklift, 1.3T-3T warehouse equipment, aerial working platform. Royal Forklift own advanced parts processing center, robot welding equipment, parts automatic hoist conveyor line, coating line, assembly line, forklifts performance test line, parts pre-test-bed and advanced ERP information management system. Taking professionalization, internationalization, and green environmental protection as standards, Royal is determined to turn into the most respectable forklift brand.

Royal is a professional material handling equipment manufacturer in China, we devote ourselves to the HME industry, with an honest, open and sincerity cooperation attitude, we aim to offer the best cost-performance products, best service and to maximize the benefit of all Royal's partners.

RY

ROYAL FORKLIFT TRUCK LI-ION BATTERY

ELECTRIC INDUSTRY FORKLIFT

The welcome R series electric forklift for the customer who takes care of the environment and high performance of AH range with finger-tip(option), the high capacity battery is available to the customer.

MODEL	TYPE	CAPACITY	CONTROLLER	BATTERY	AUTO PARKING*	FINGER TIPS
Standard 4 Wheel	Electric Forklift	1.5-3.5 Ton	Italy ZAPI AC	Li-ion Batetry	No	OPI
Standard 3 Wheel	Electric Forklift	1.6-2.0 Ton	Italy ZAPI AC	Li-ion Batetry	STD.	OPI
High performance 4 Wheel	Electric Forklift	2.0 Ton	Italy ZAPI AC	Li-ion Batetry	STD.	OPI

* • Auto Parking : Electromagnetic parking. It's means when the truck stopped without operation for 2-3 secs., the truck be autometically in parking brake situation.
• Features and equipment may vary depending on market.

ROYAL TRUCK ROUGH TERRAIN FORKLIFT

HIGH-QUALITY TYRES

Industrial tires with a wide footprint help to provide more stability and lifting capacity in rough work environments.

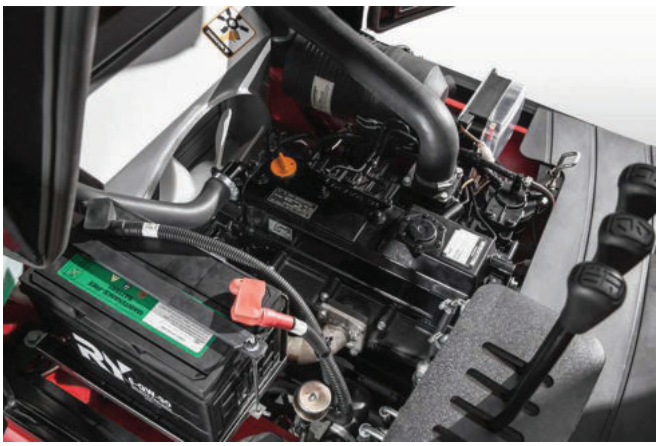

HIGH GROUND CLEARANCE

Offer more maneuverability and keep the machine moving in the roughest of applications.

WIDE-VIEW MAST

Wide-view mast provides excellent through mast visibility and improving the work efficiency, as well as allowing safe operation of the forklift.

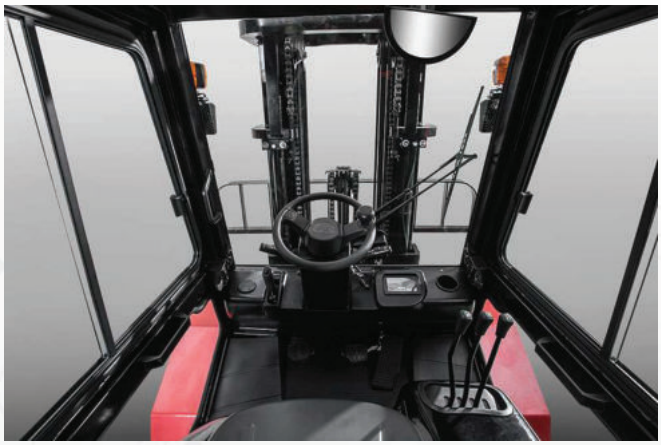

EXCELLENT FLEXIBILITY IN ROUGH TERRAIN

Powershift transmission provides ultimate traction during inclement weather conditions and rough operating ground.

SUPERIOR PERFORMANCE IN EXTREME CONDITIONS COMPACT SIZE MEETS WITH EUROPEAN STANDARDS.

A superior full-floating overhead guard is installed with rubber damping instead of the transitional rigid design. This improvement helps to greatly reduce machine vibration and offer a smoother ride over rough terrain, which helps to reduce operator fatigue. World-renowned brand engines for superior performance.

MITSUBISHI S4S
2WD 2-3.5 TON

RATED OUTPUT	RATED TORQUE
35.5 kw/2250 rpm	182 N.m/1800 rpm

YANMAR 4TNE98
4WD 2-3.5 TON

RATED OUTPUT	RATED TORQUE
42.1 kw/2300 rpm	196 N.m/1700 rpm

PERKINS 1104C-44TA
2WD 4.0-5.0 TON

RATED OUTPUT	RATED TORQUE
74.5 kw/2300 rpm	415 N.m/1350 rpm

Designed for high mobility
& all working condition
MORE ENQUIRIES,
PLEASE CONTACT US AT
www.ryforklift.com

OUR CLIENTS

UNITED MOTOR WORKS (SIAM) PUBLIC COMPANY LIMITED

www.umwsiam.com | United Motor Works Siam PCL | UMWS United | @Unitedmotorworks

Driven by Excellence

UNITED MOTOR WORKS (SIAM) PUBLIC COMPANY LIMITED

UNITED MOTOR WORKS (SIAM) PCL
No.2 Phahon Yothin Road, Tambol Prachathipat,
Amphur Thanyaburi, Pathumthani 12130, Thailand
Tel: 0-2033-5959 #1

United Motor Works Siam PCL
UMWS United
@Unitedmotorworks
www.umwsiam.com
WEBSITE